VECTORWORKS EDUCATIONAL VERSION

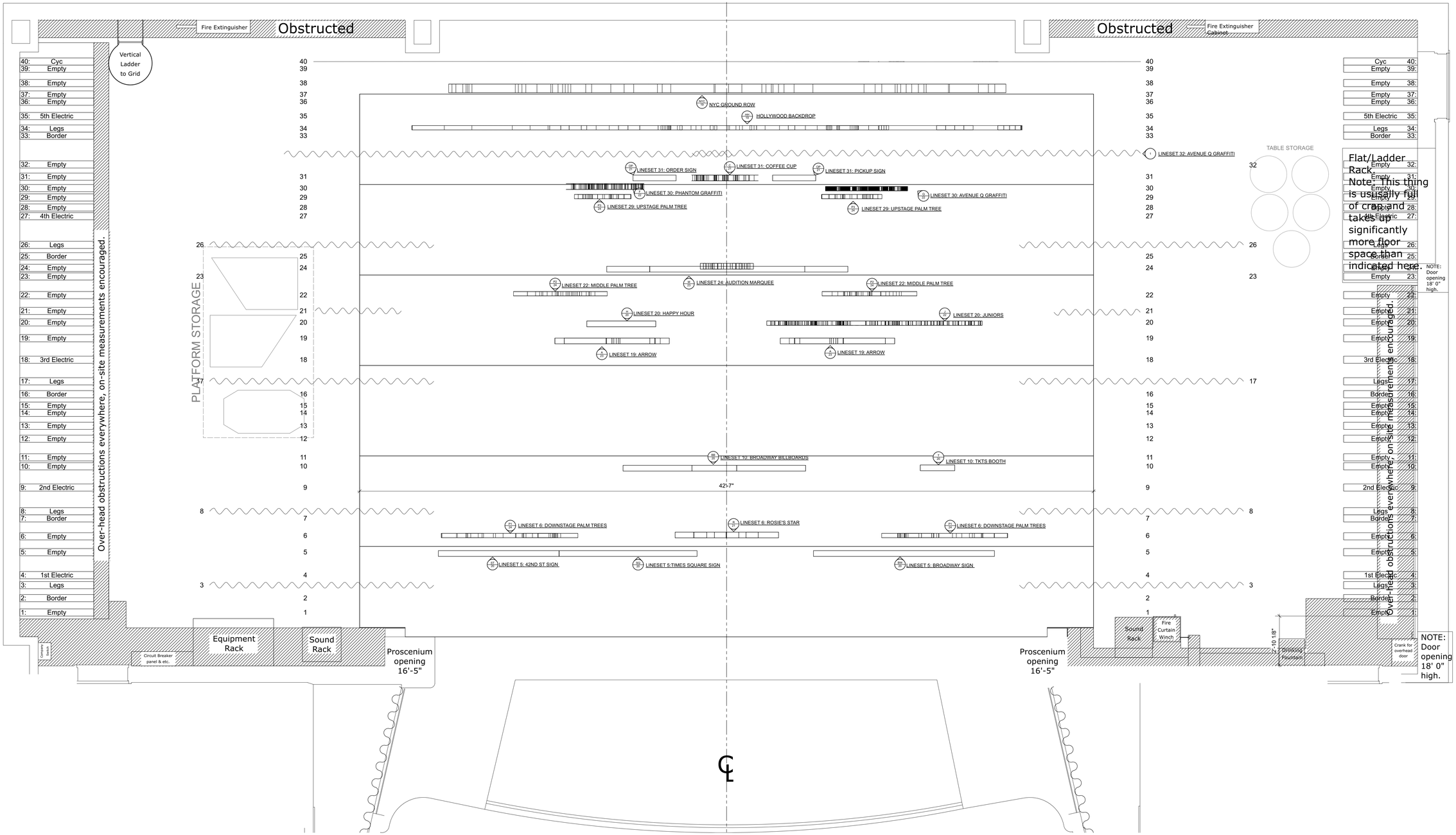

BALL STATE UNIVERSITY		
TASTE OF BROADWAY	UNIVERSITY THEATRE	
DIRECTOR: NINA KOSSLER AND BEVERLY BAUTISTA		1
DESIGNER: EMMY WINTER	SCALE: 3/8" = 1'0"	
SIGN LOCATIONS	03/02/2023	OF 25

VECTORWORKS EDUCATIONAL VERSION

VECTORWORKS EDUCATIONAL VERSION

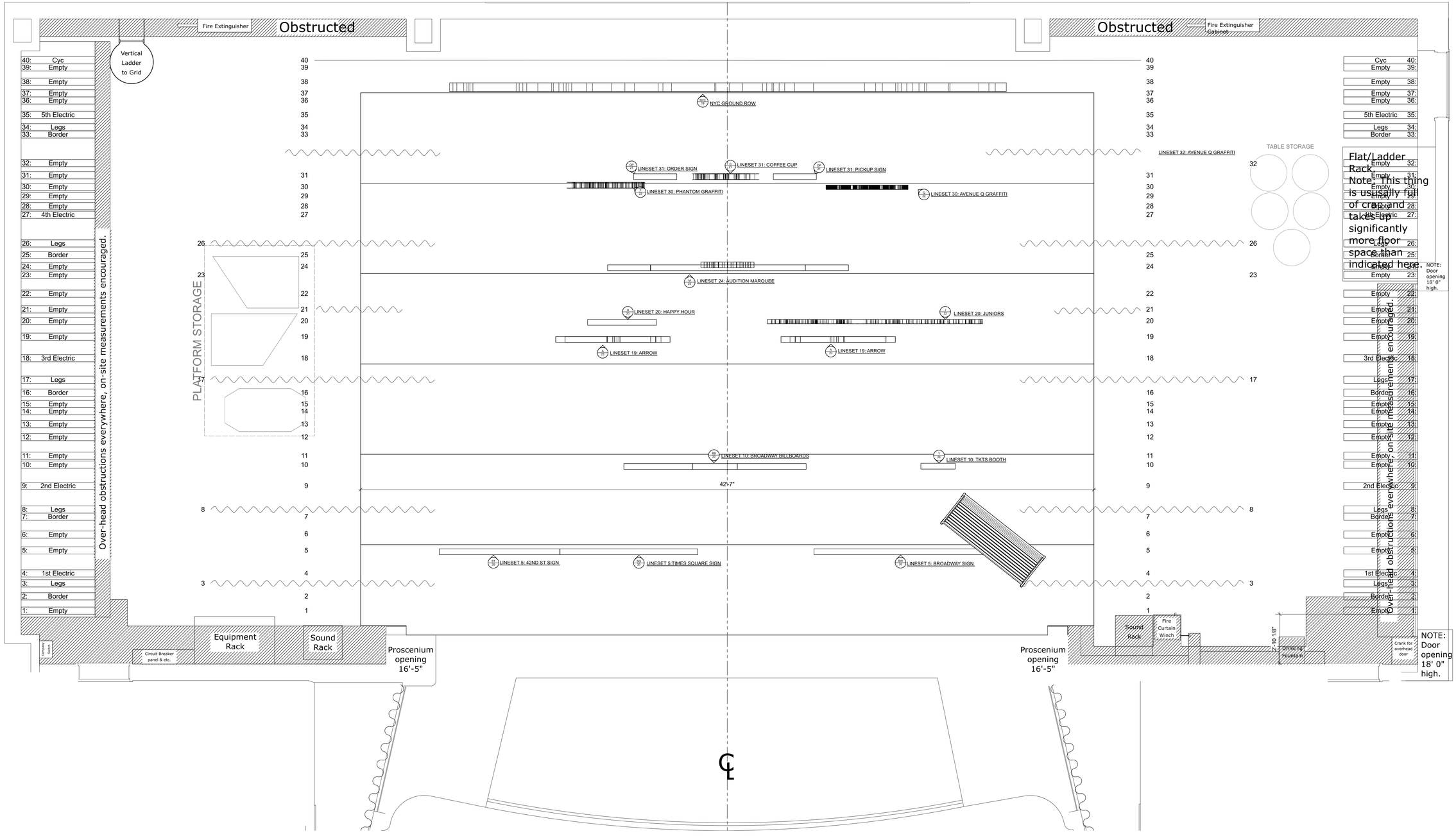

BALL STATE UNIVERSITY		
TASTE OF BROADWAY	UNIVERSITY THEATRE	
DIRECTOR: NINA KOSSLER AND BEVERLY BAUTISTA		2
DESIGNER: EMMY WINTER	SCALE: 3/8" = 1'0"	
GROUNDPLAN: TIMES SQUARE	03/02/2023	OF 25

VECTORWORKS EDUCATIONAL VERSION

VECTORWORKS EDUCATIONAL VERSION

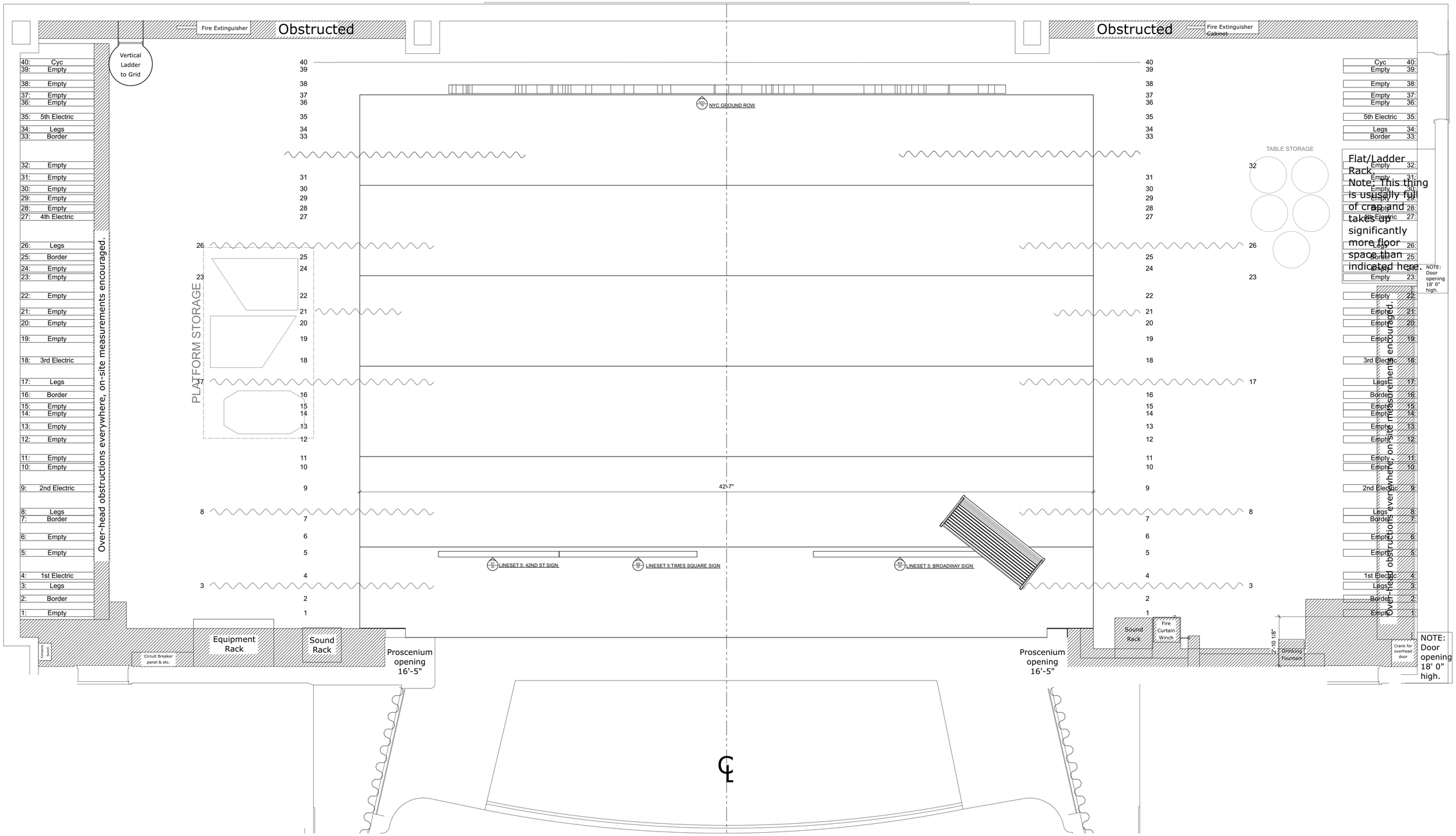

BALL STATE UNIVERSITY		
TASTE OF BROADWAY	UNIVERSITY THEATRE	
DIRECTOR: NINA KOSSLER AND BEVERLY BAUTISTA		3
DESIGNER: EMMY WINTER	SCALE: 3/8" = 1'0"	
GROUNDPLAN: STREET (ACT 1)	03/02/2023	OF 25

VECTORWORKS EDUCATIONAL VERSION

VECTORWORKS EDUCATIONAL VERSION

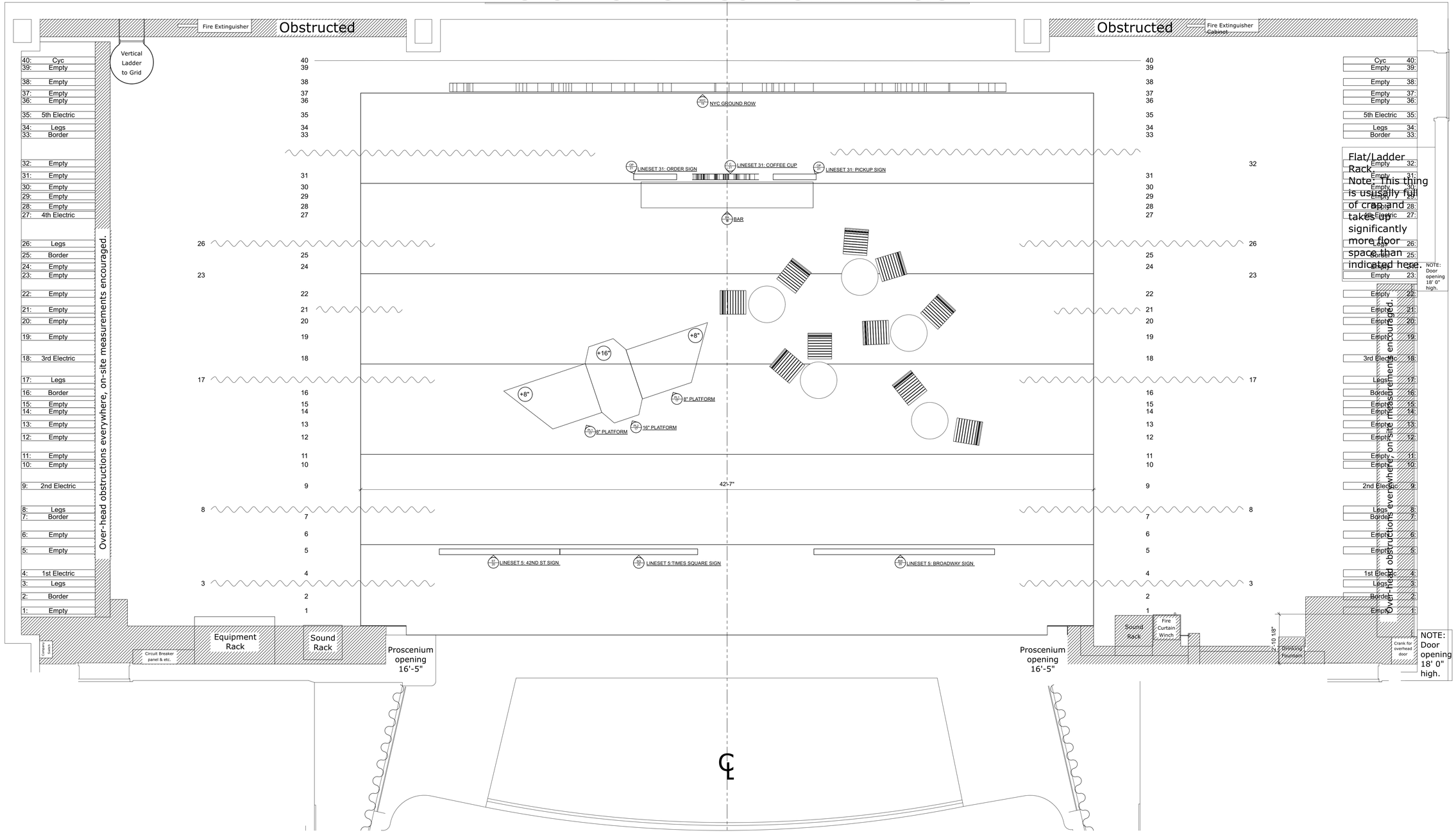

BALL STATE UNIVERSITY		
TASTE OF BROADWAY	UNIVERSITY THEATRE	
DIRECTOR: NINA KOSSLER AND BEVERLY BAUTISTA		4
DESIGNER: EMMY WINTER	SCALE: 3/8" = 1'0"	
GROUNDPLAN: CAFE	03/02/2023	OF 25

VECTORWORKS EDUCATIONAL VERSION

VECTORWORKS EDUCATIONAL VERSION

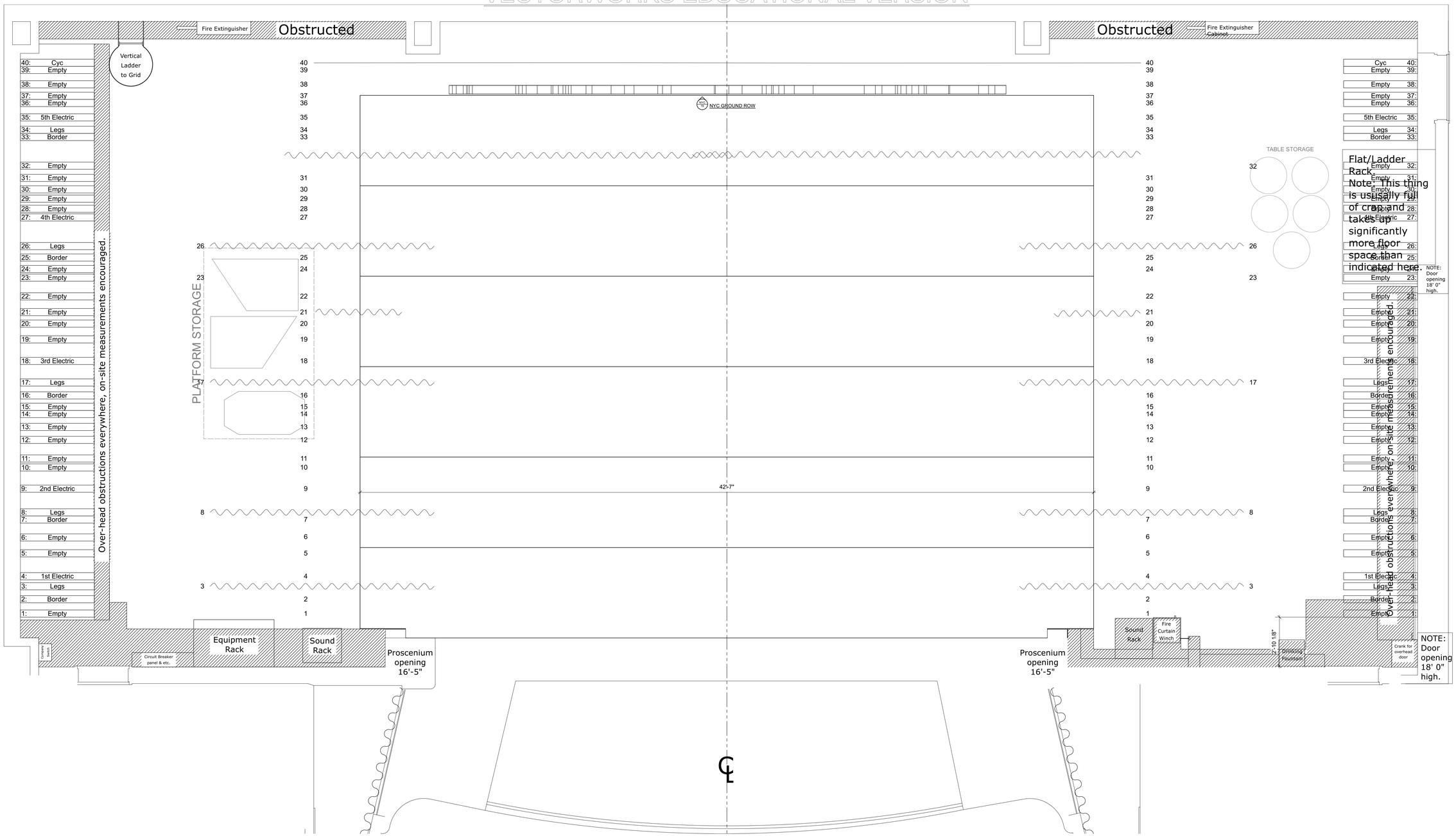

BALL STATE UNIVERSITY		
TASTE OF BROADWAY	UNIVERSITY THEATRE	
DIRECTOR: NINA KOSSLER AND BEVERLY BAUTISTA		5
DESIGNER: EMMY WINTER	SCALE: 3/8" = 1'0"	
GROUNDPLAN: MISTER CELLOPHANE	03/02/2023	OF 25

VECTORWORKS EDUCATIONAL VERSION

VECTORWORKS EDUCATIONAL VERSION

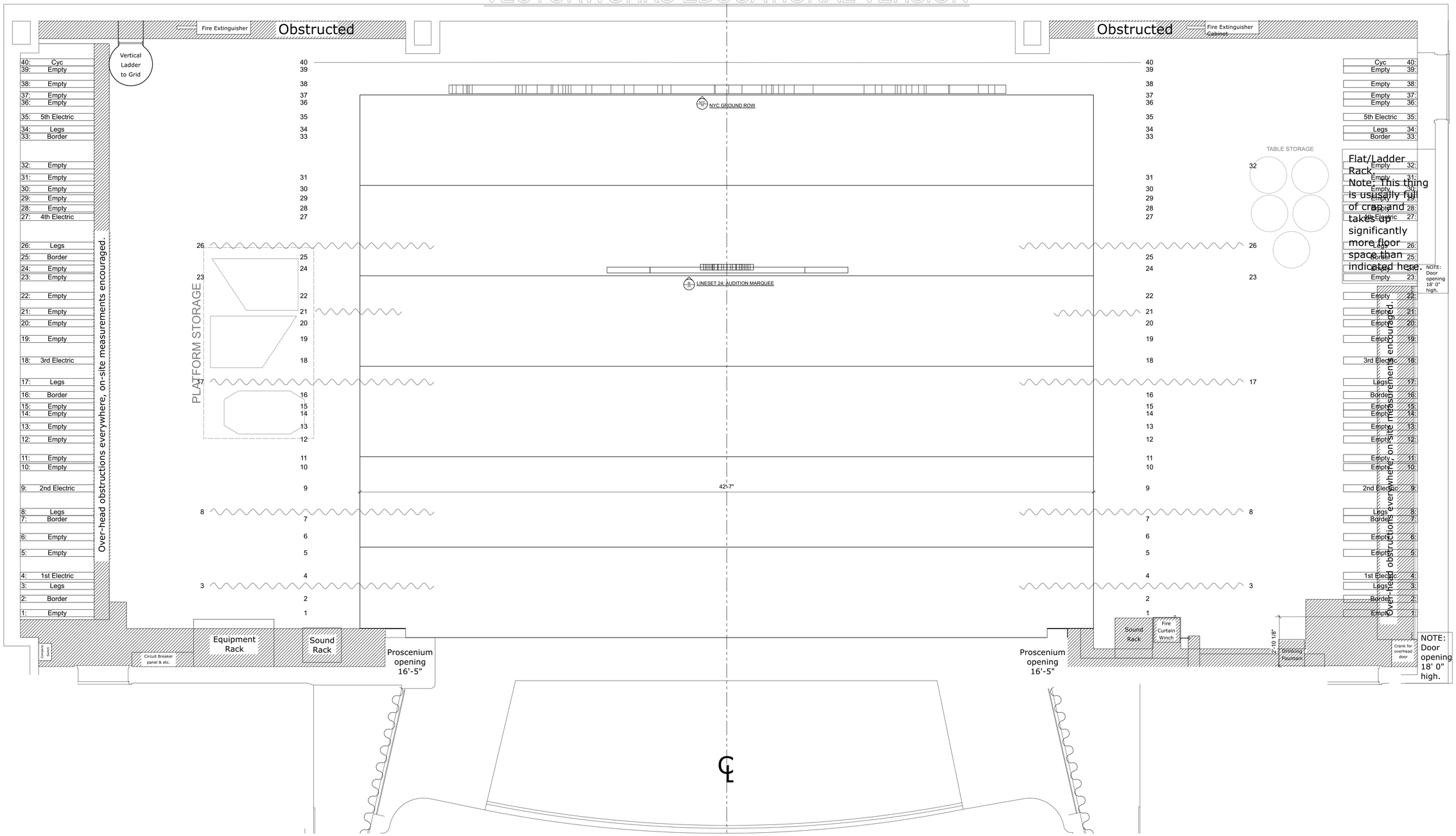

BALL STATE UNIVERSITY		
TASTE OF BROADWAY	UNIVERSITY THEATRE	
DIRECTOR: NINA KOSSLER AND BEVERLY BAUTISTA		6
DESIGNER: EMMY WINTER	SCALE: 3/8" = 1'0"	
GROUNDPLAN: THEATRE (AUDITION)	03/02/2023	OF 25

VECTORWORKS EDUCATIONAL VERSION

VECTORWORKS EDUCATIONAL VERSION

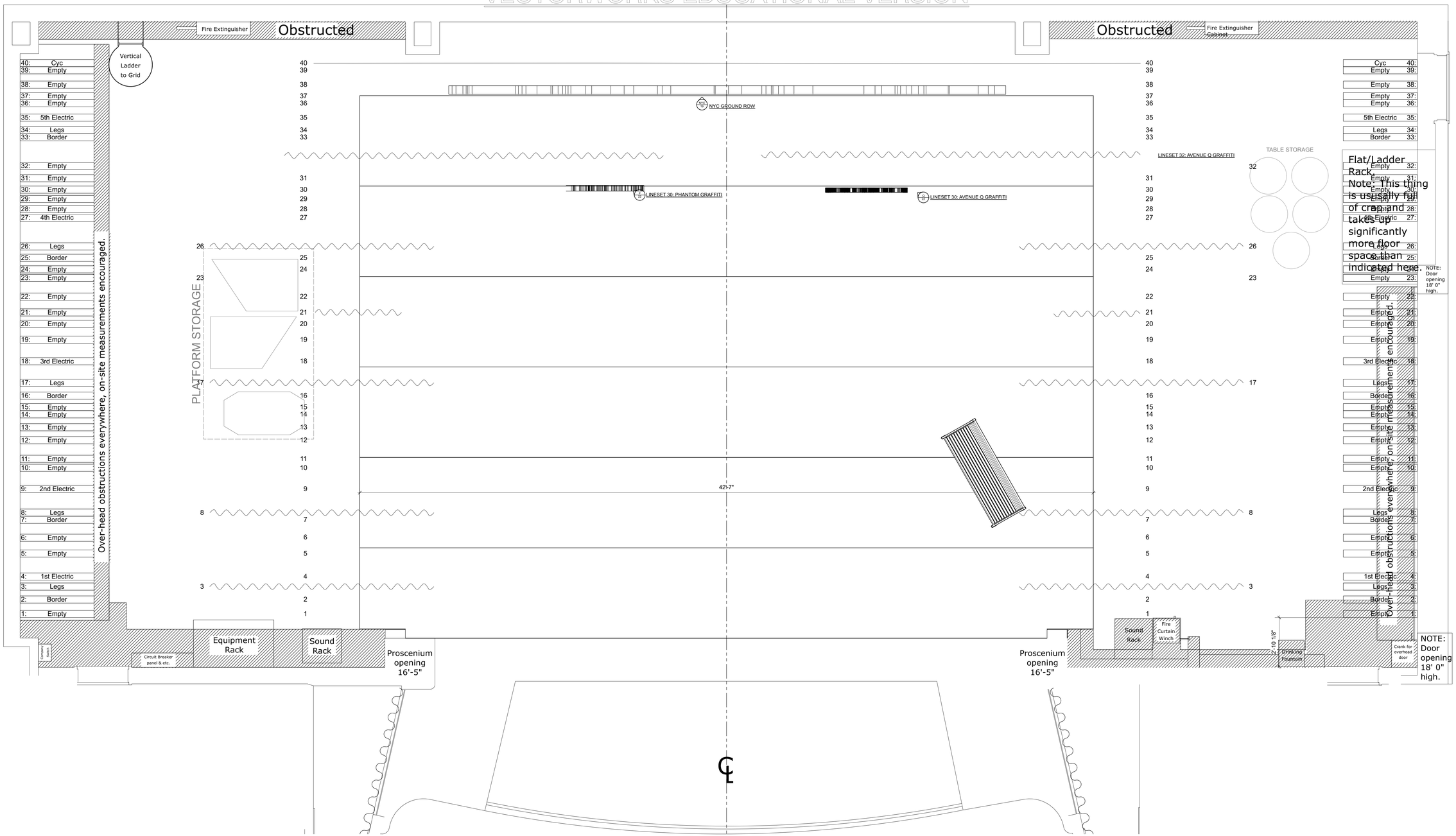

BALL STATE UNIVERSITY		
TASTE OF BROADWAY	UNIVERSITY THEATRE	
DIRECTOR: NINA KOSSLER AND BEVERLY BAUTISTA		7
DESIGNER: EMMY WINTER	SCALE: 3/8" = 1'0"	
GROUNDPLAN: ALLEY	03/02/2023	OF 25

VECTORWORKS EDUCATIONAL VERSION

VECTORWORKS EDUCATIONAL VERSION

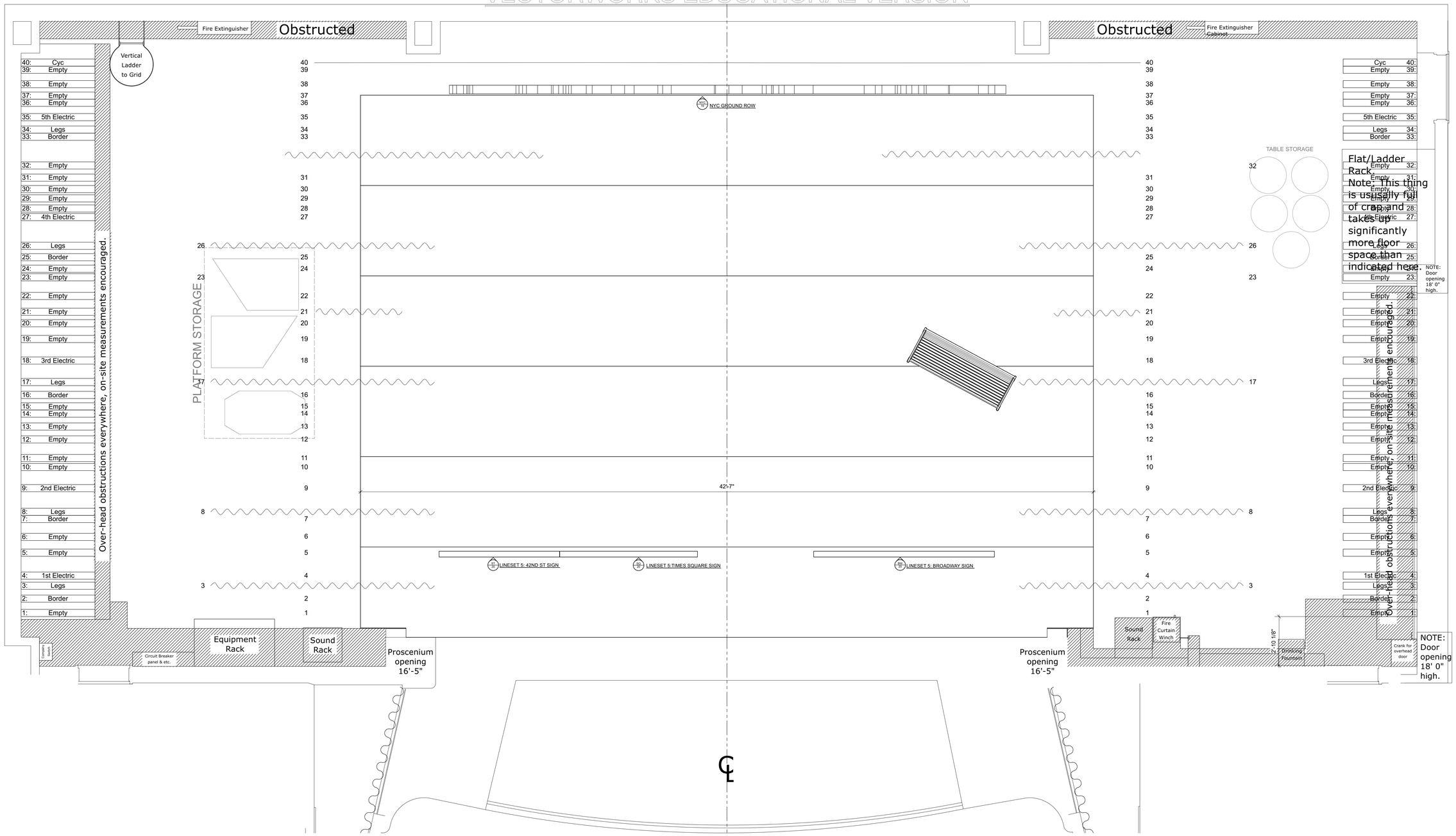

BALL STATE UNIVERSITY		
TASTE OF BROADWAY	UNIVERSITY THEATRE	
DIRECTOR: NINA KOSSLER AND BEVERLY BAUTISTA		8
DESIGNER: EMMY WINTER	SCALE: 3/8" = 1'0"	
GROUNDPLAN: STREET (ACT 2)	03/02/2023	OF 25

VECTORWORKS EDUCATIONAL VERSION

VECTORWORKS EDUCATIONAL VERSION

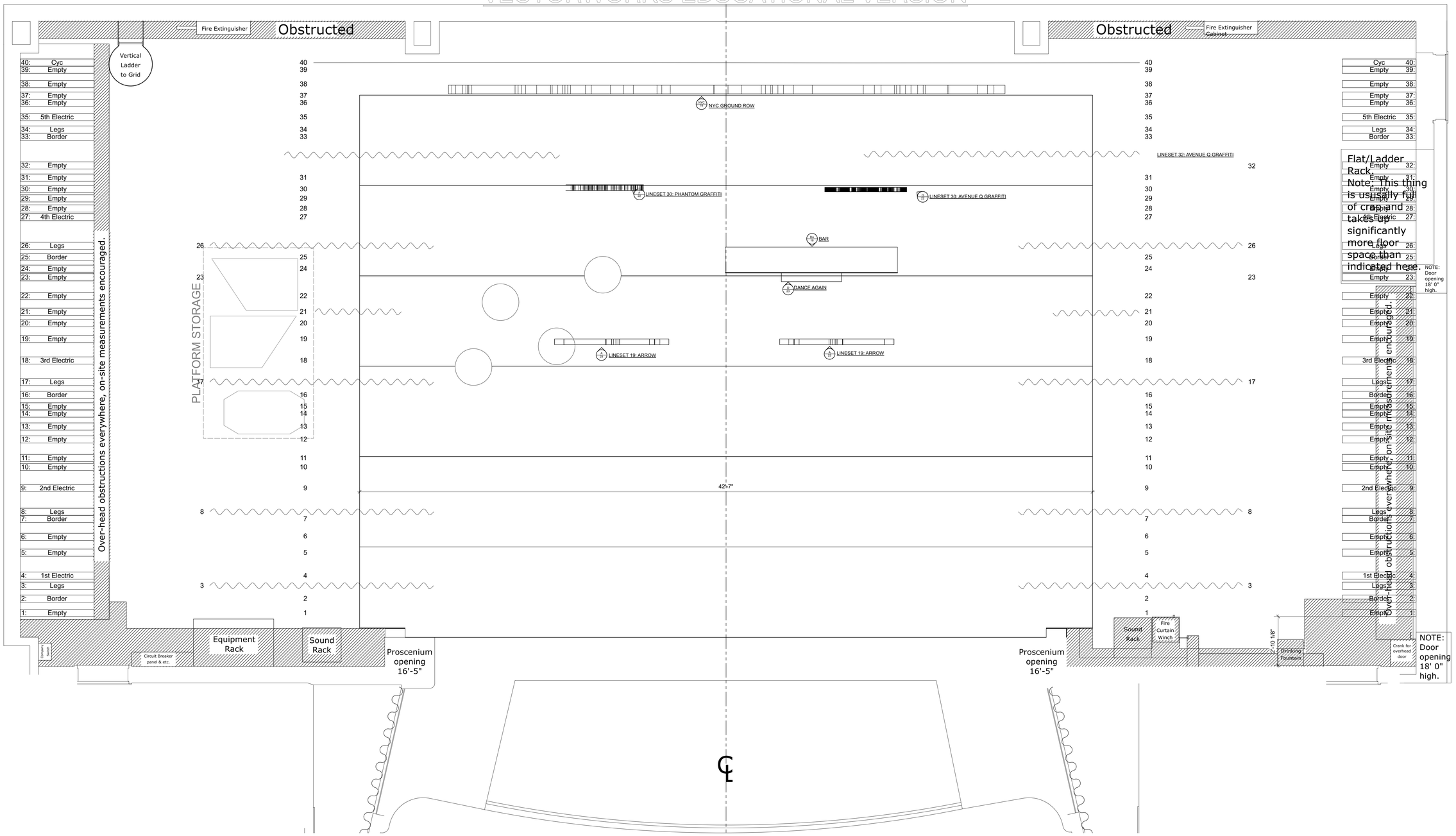

BALL STATE UNIVERSITY		
TASTE OF BROADWAY	UNIVERSITY THEATRE	
DIRECTOR: NINA KOSSLER AND BEVERLY BAUTISTA		9
DESIGNER: EMMY WINTER	SCALE: 3/8" = 1'0"	
GROUNDPLAN: NIGHTCLUB	03/02/2023	OF 25

VECTORWORKS EDUCATIONAL VERSION

VECTORWORKS EDUCATIONAL VERSION

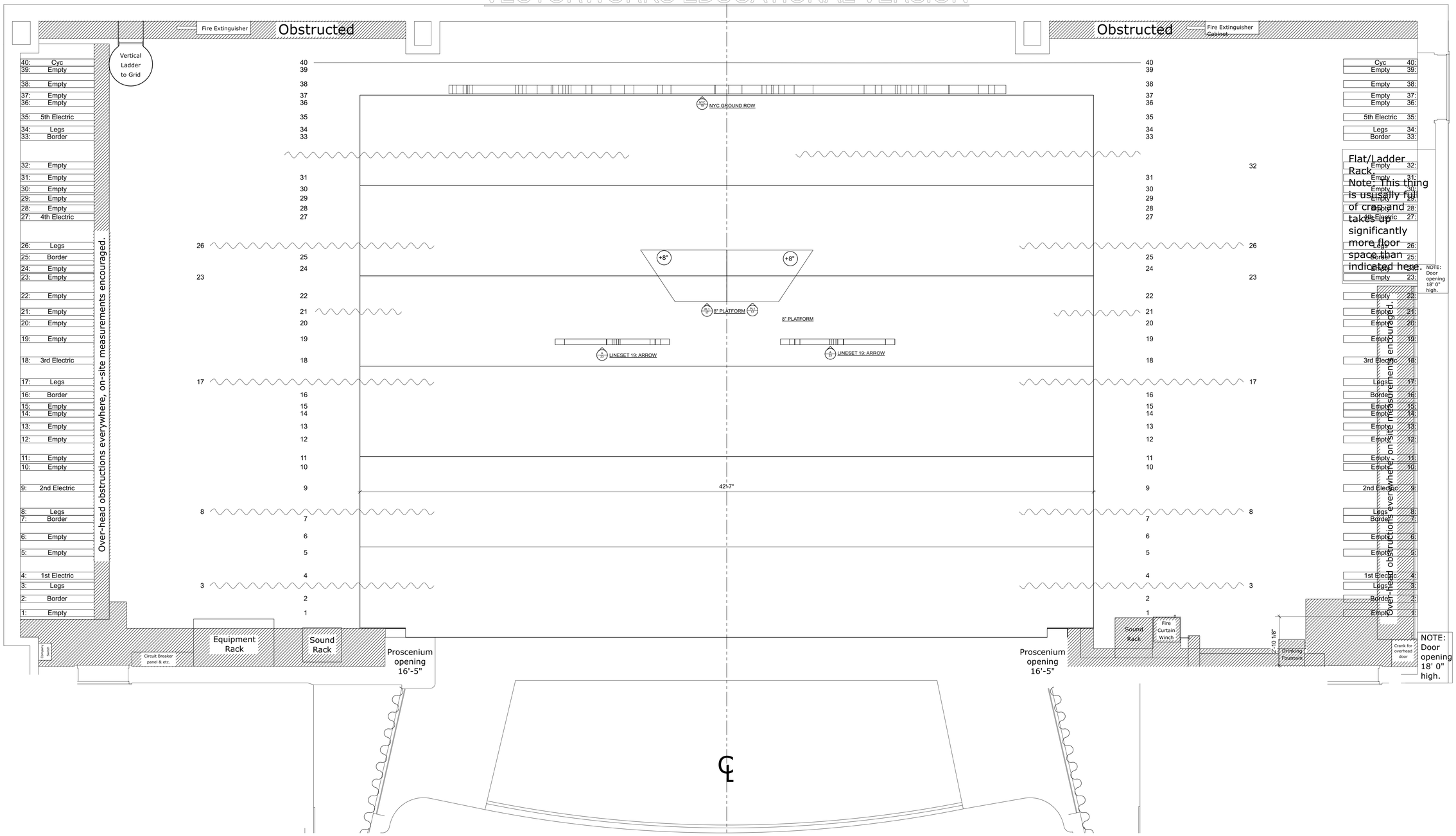

BALL STATE UNIVERSITY		
TASTE OF BROADWAY	UNIVERSITY THEATRE	
DIRECTOR: NINA KOSSLER AND BEVERLY BAUTISTA		10
DESIGNER: EMMY WINTER	SCALE: 3/8" = 1'0"	
GROUNDPLAN: WALL IN MY HEAD	03/02/2023	OF 25

VECTORWORKS EDUCATIONAL VERSION

VECTORWORKS EDUCATIONAL VERSION

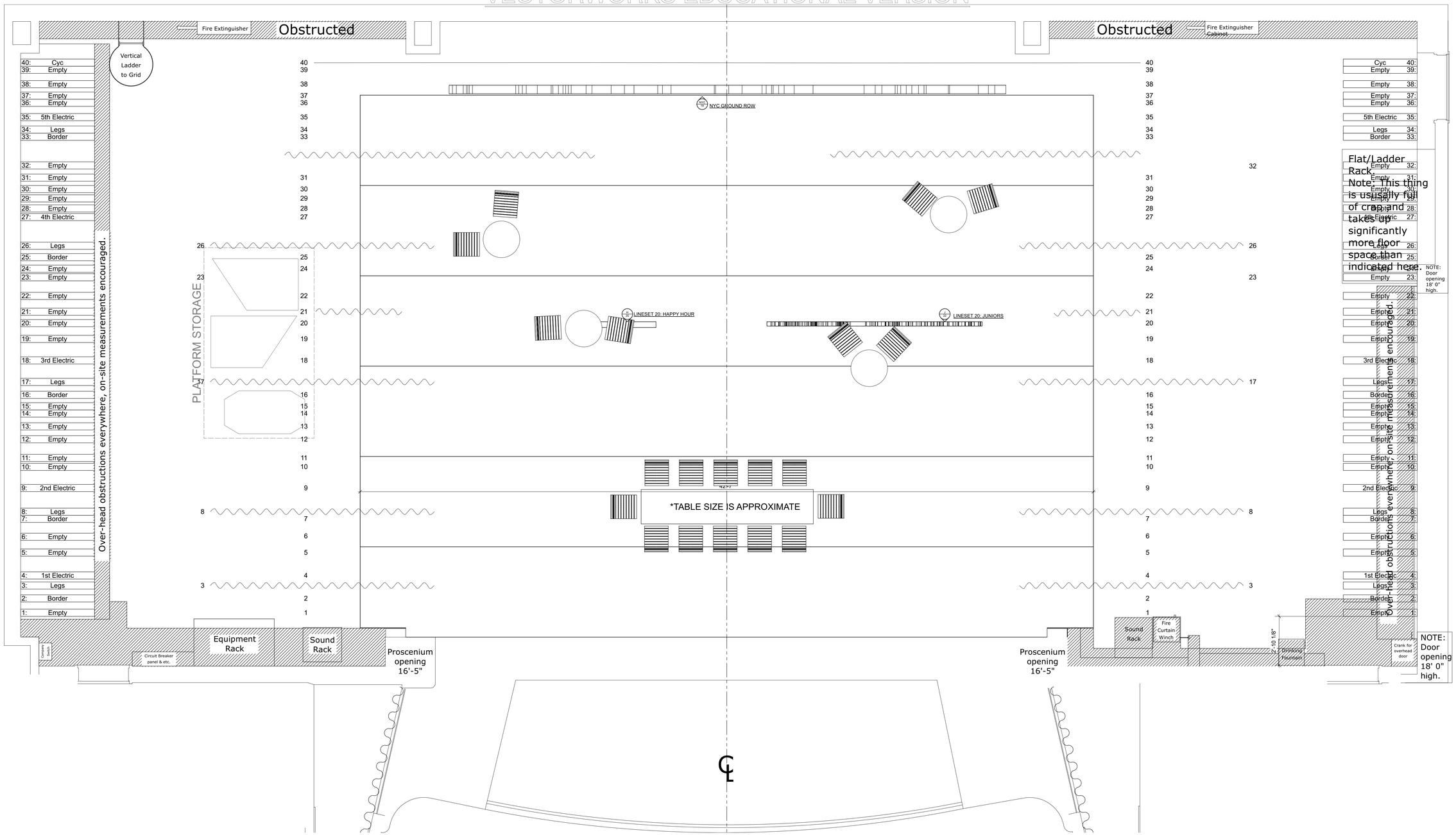

BALL STATE UNIVERSITY		
TASTE OF BROADWAY	UNIVERSITY THEATRE	
DIRECTOR: NINA KOSSLER AND BEVERLY BAUTISTA		11
DESIGNER: EMMY WINTER	SCALE: 3/8" = 1'0"	
GROUNDPLAN: RESTAURANT	03/02/2023	OF 25

VECTORWORKS EDUCATIONAL VERSION

VECTORWORKS EDUCATIONAL VERSION

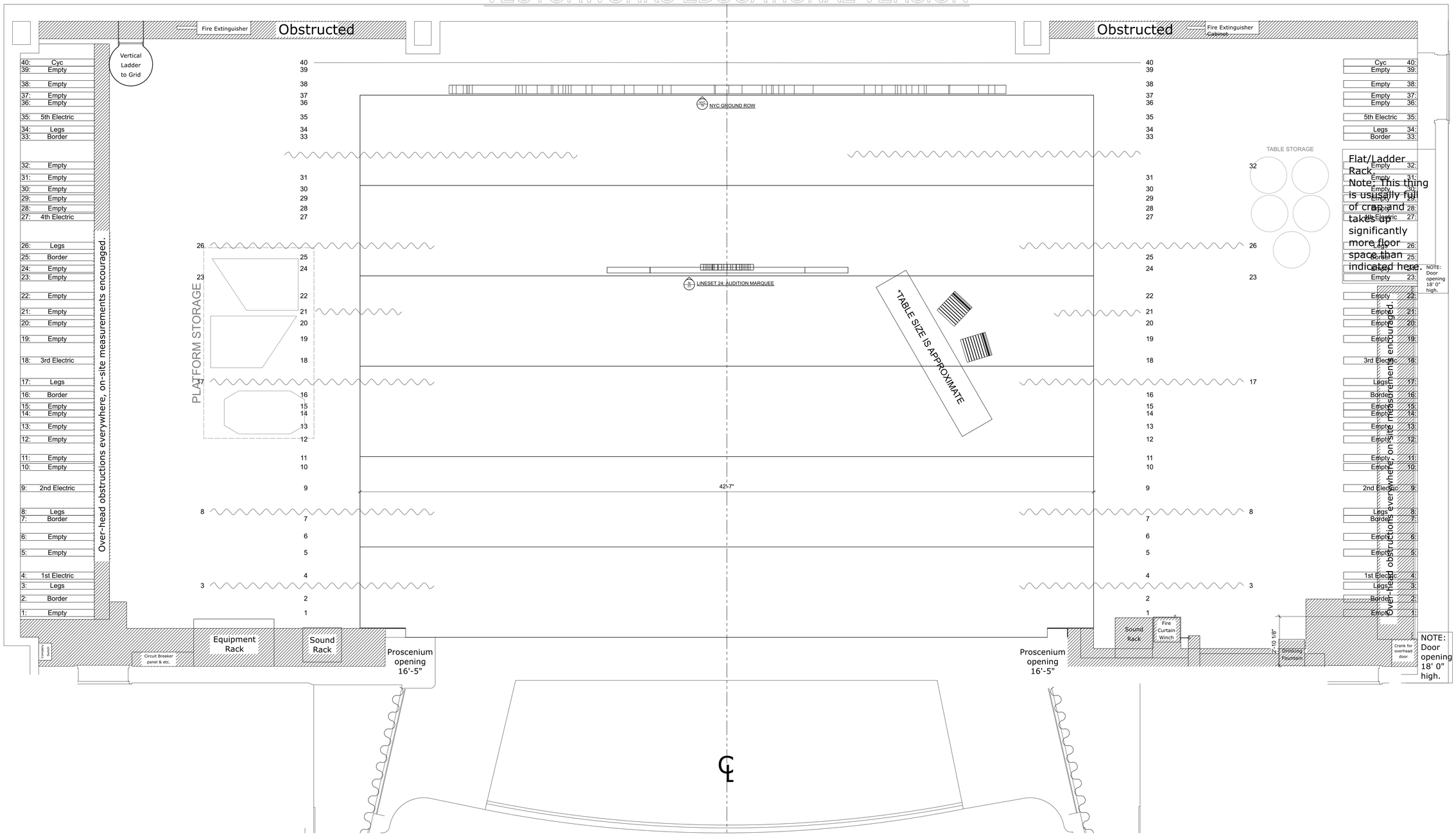

BALL STATE UNIVERSITY		
TASTE OF BROADWAY	UNIVERSITY THEATRE	
DIRECTOR: NINA KOSSLER AND BEVERLY BAUTISTA		12
DESIGNER: EMMY WINTER	SCALE: 3/8" = 1'0"	
GROUNDPLAN: RIVER WON'T FLOW	03/02/2023	OF 25

VECTORWORKS EDUCATIONAL VERSION

VECTORWORKS EDUCATIONAL VERSION

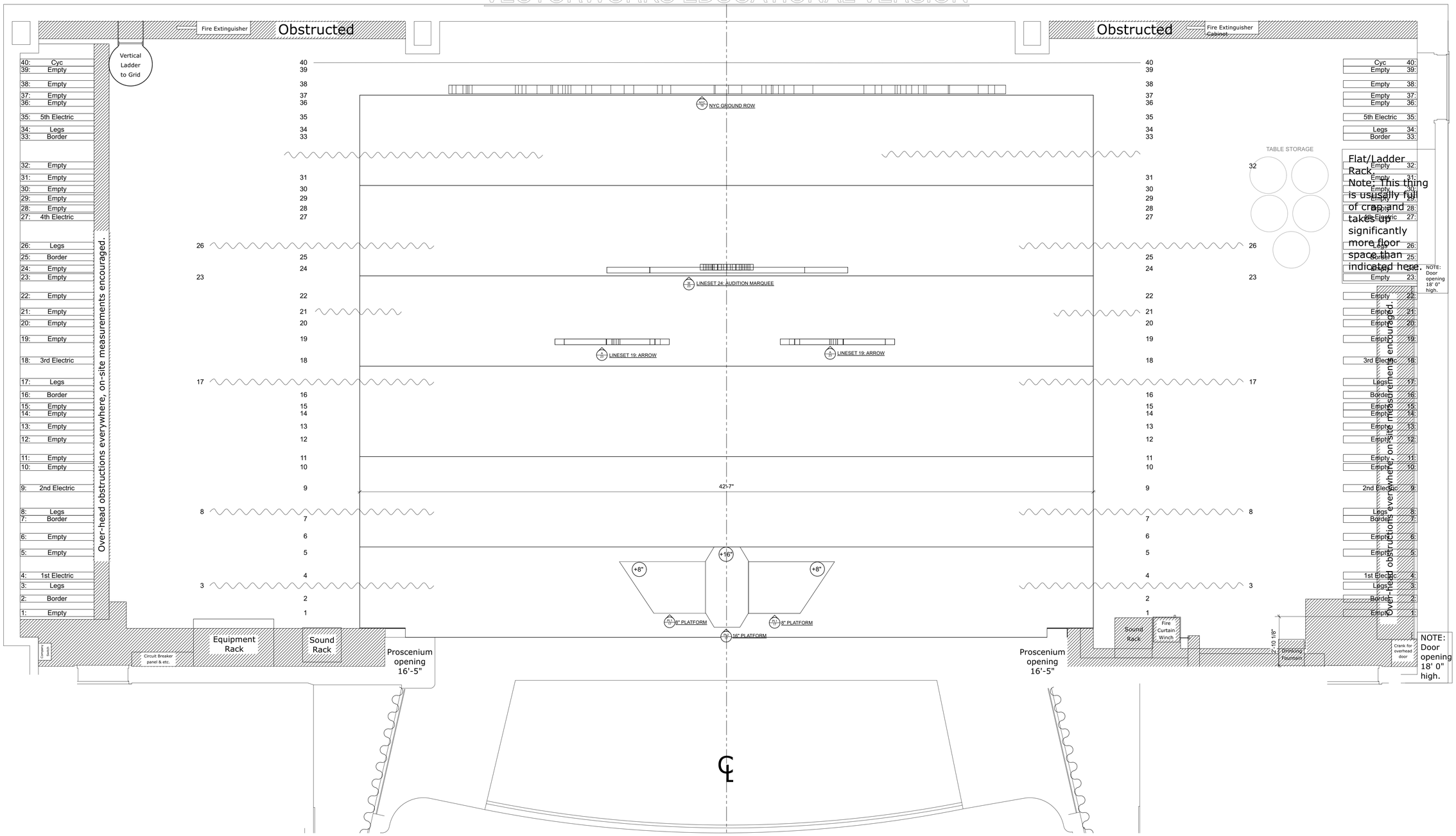

BALL STATE UNIVERSITY		
TASTE OF BROADWAY	UNIVERSITY THEATRE	
DIRECTOR: NINA KOSSLER AND BEVERLY BAUTISTA		13
DESIGNER: EMMY WINTER	SCALE: 3/8" = 1'0"	
GROUNDPLAN: MY STRONGEST SUIT	03/02/2023	OF 25

VECTORWORKS EDUCATIONAL VERSION

VECTORWORKS EDUCATIONAL VERSION

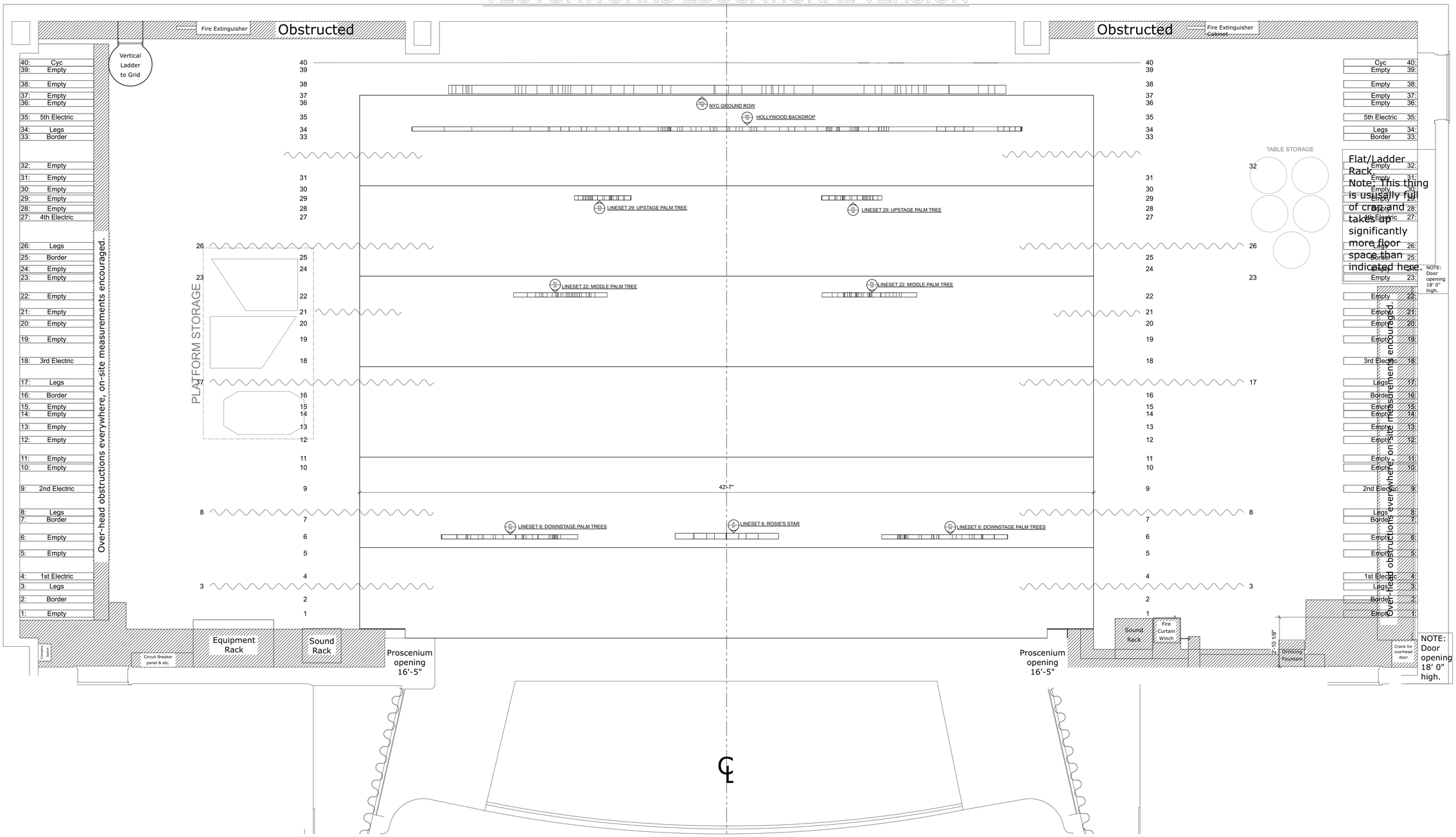

BALL STATE UNIVERSITY		
TASTE OF BROADWAY	UNIVERSITY THEATRE	
DIRECTOR: NINA KOSSLER AND BEVERLY BAUTISTA		14
DESIGNER: EMMY WINTER	SCALE: 3/8" = 1'0"	
GROUNDPLAN: BRAND NEW DAY	03/02/2023	OF 25

VECTORWORKS EDUCATIONAL VERSION

VECTORWORKS EDUCATIONAL VERSION

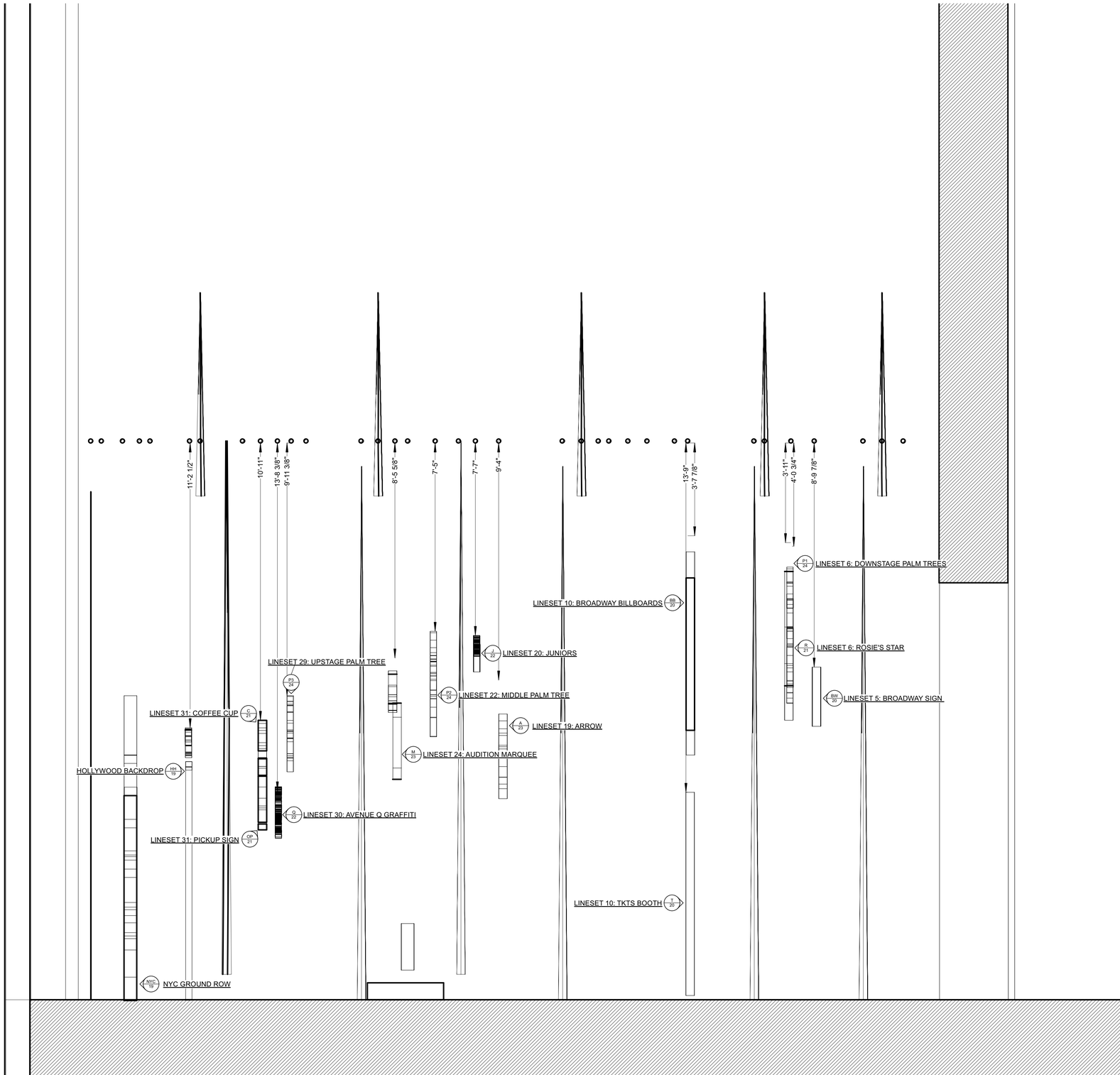

BALL STATE UNIVERSITY		
TASTE OF BROADWAY	UNIVERSITY THEATRE	
DIRECTOR: NINA KOSSLER AND BEVERLY BAUTISTA		15
DESIGNER: EMMY WINTER	SCALE: 3/8" = 1'0"	
SR CL SECTION VIEW	03/02/2023	OF 25

VECTORWORKS EDUCATIONAL VERSION

VECTORWORKS EDUCATIONAL VERSION

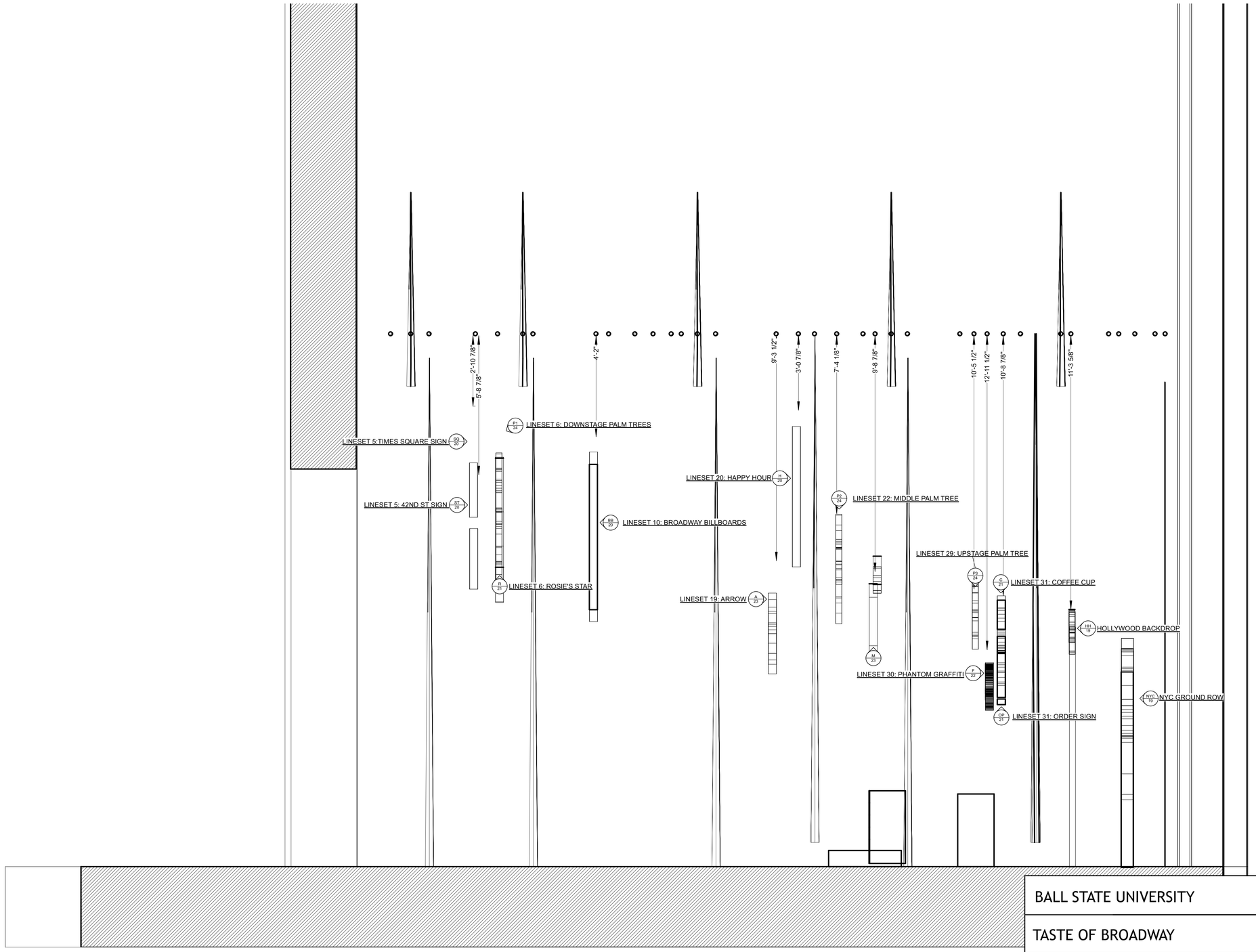

BALL STATE UNIVERSITY		
TASTE OF BROADWAY	UNIVERSITY THEATRE	
DIRECTOR: NINA KOSSLER AND BEVERLY BAUTISTA		16
DESIGNER: EMMY WINTER	SCALE: 3/8" = 1'0"	
SL CL SECTION VIEW	03/02/2023	OF 25

VECTORWORKS EDUCATIONAL VERSION

VECTORWORKS EDUCATIONAL VERSION

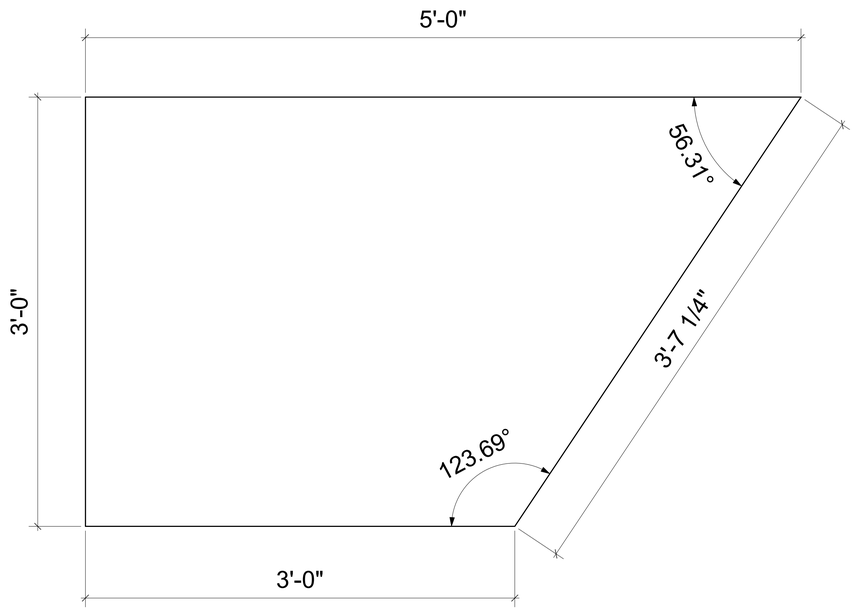

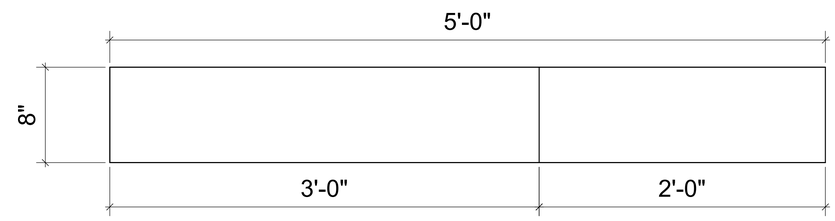

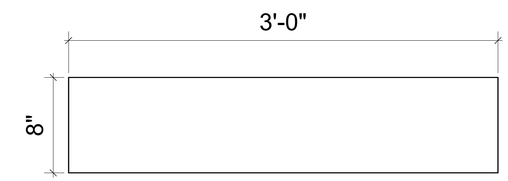

PL1 8" PLATFORM- REVERSE AND REPEAT (2 TOTAL)
Scale: 2" = 1'-0"

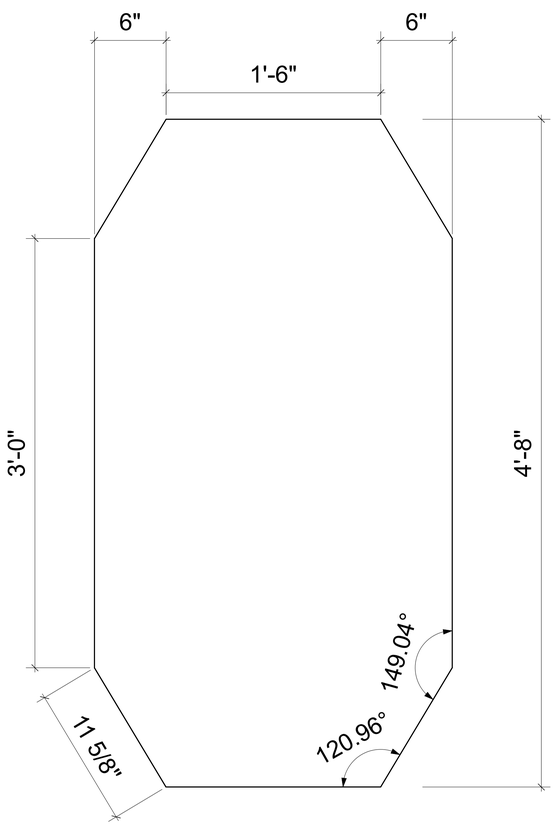

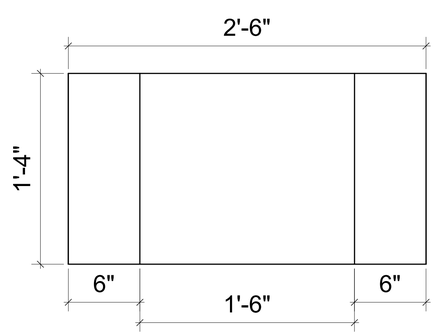

PLATFORM CAN BE RECTANGULAR IF NECCESSARY.

PL2 16" PLATFORM
Scale: 2" = 1'-0"

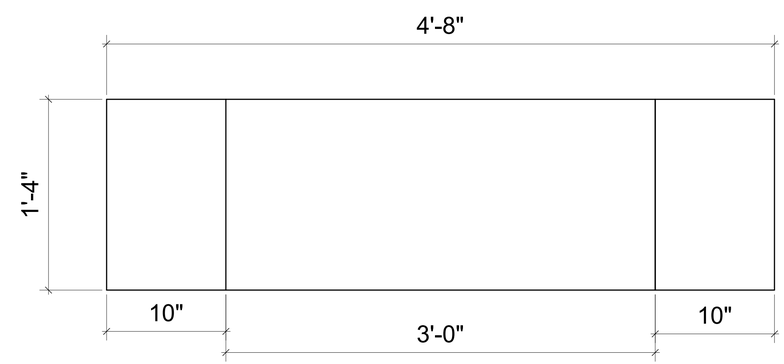

General Notes

1.ALL THREE PLATFORMS ARE ON AIR CASTERS.

BALL STATE UNIVERSITY		
TASTE OF BROADWAY	UNIVERSITY THEATRE	
DIRECTOR: NINA KOSSLER AND BEVERLY BAUTISTA		17
DESIGNER: EMMY WINTER	SCALE: 2" = 1'0"	
PLATFORMS	03/02/2023	OF 25

VECTORWORKS EDUCATIONAL VERSION

VECTORWORKS EDUCATIONAL VERSION

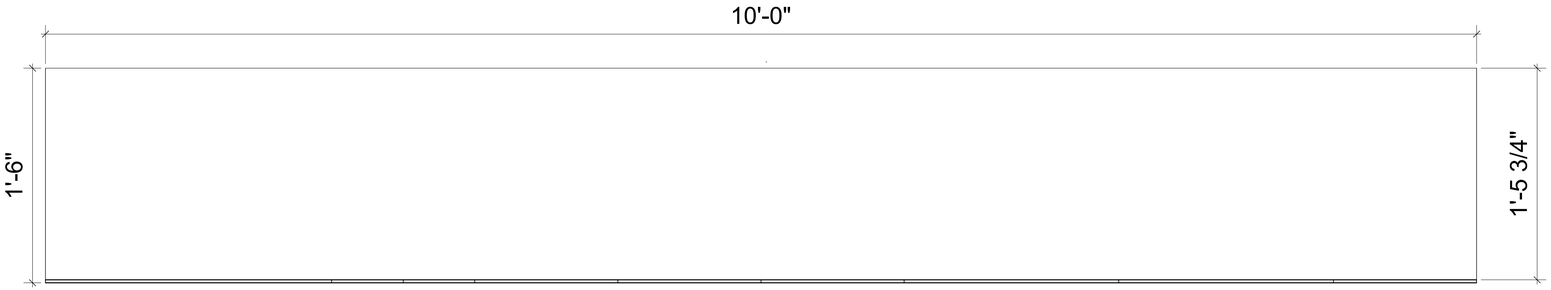

BA BAR TOP AND RIGHT VIEW
Scale: 2" = 1'-0"

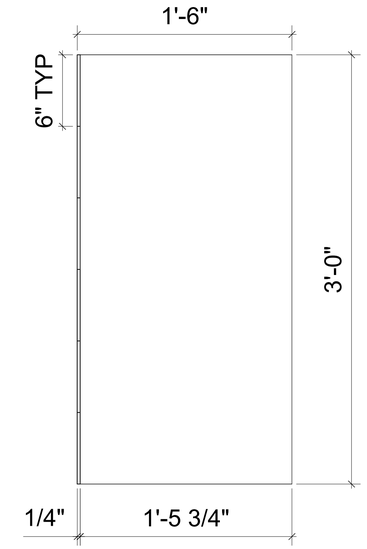

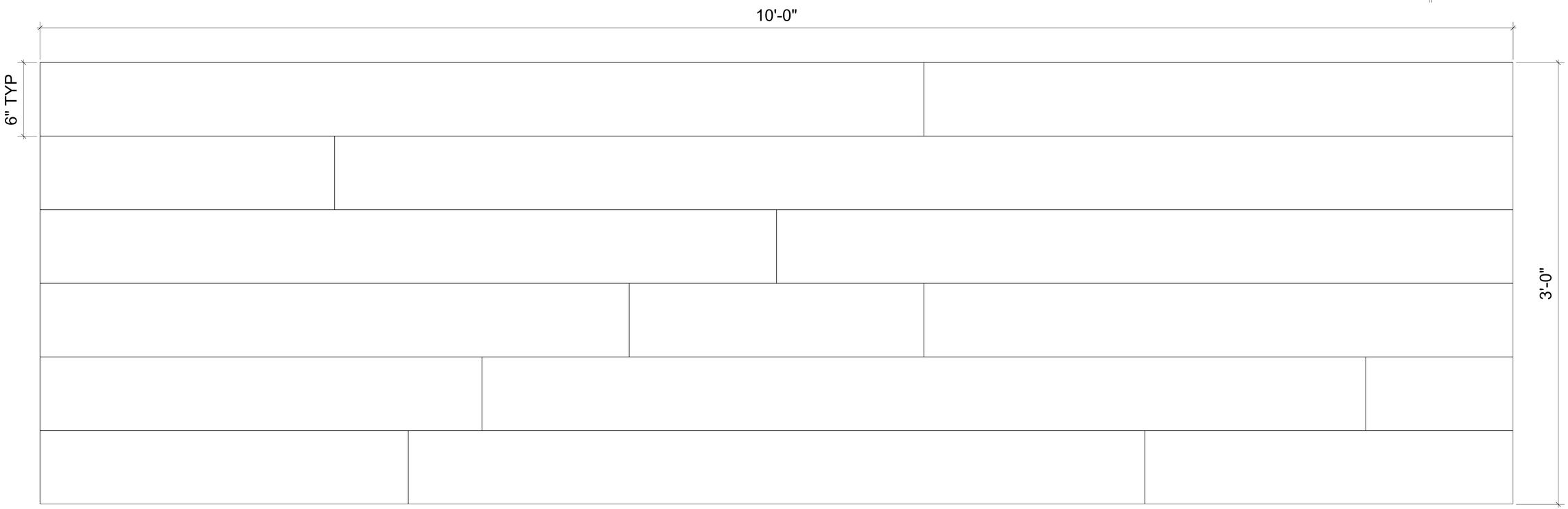

General Notes

1. **BAR IS JUST A FRAME WITH LUAN FACING ON TOP, SIDES, AND FRONT. (TOP MIGHT NEED REINFORCED, CONSULT DIRECTORS)**
2. **FRONT FACING IS 6" WIDE LUAN PLANKS WITH SCATTERED SEAMS. SHOWN MEASUREMENTS ARE SUGGESTIONS.**
3. **BAR WILL NEED SMALL CASTERS.**

BALL STATE UNIVERSITY		
TASTE OF BROADWAY	UNIVERSITY THEATRE	
DIRECTOR: NINA KOSSLER AND BEVERLY BAUTISTA		18
DESIGNER: EMMY WINTER	SCALE: VARIED	
BAR	03/02/2023	OF 25

VECTORWORKS EDUCATIONAL VERSION

VECTORWORKS EDUCATIONAL VERSION

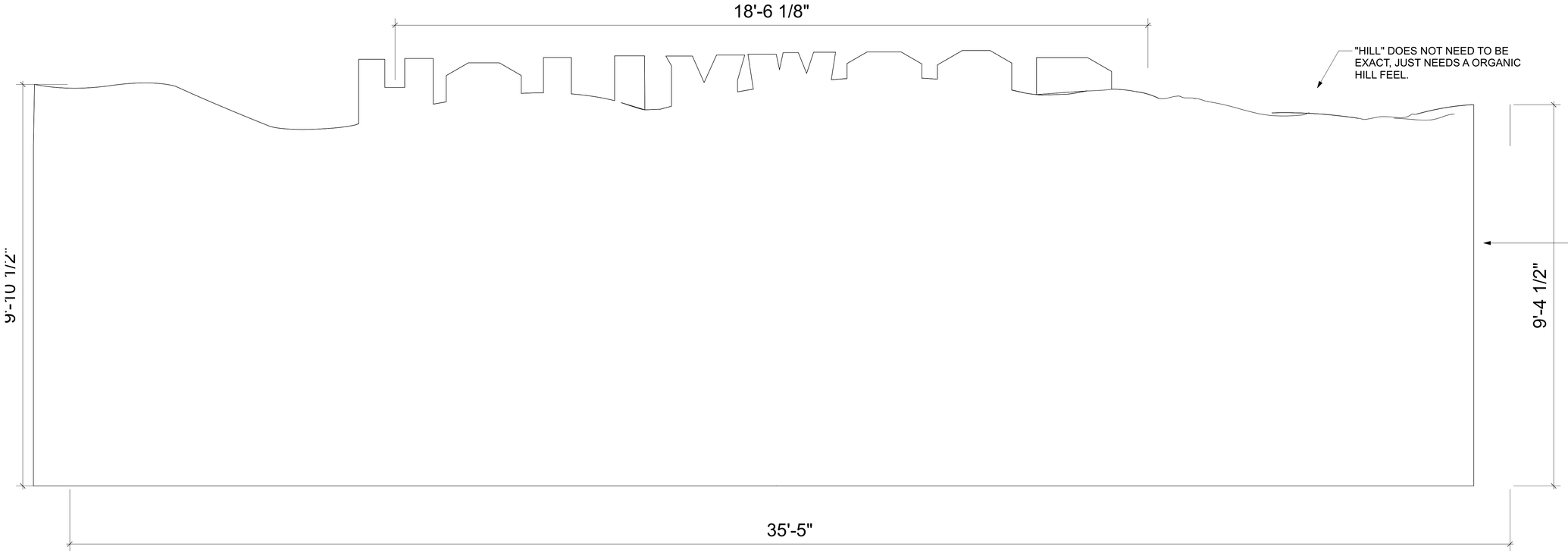

HH HOLLYWOOD
Scale: 3/4" = 1'-0"

General Notes

1. **ALL SIGNS ARE PLYWOOD CUTOUTS, FRAMED HOWEVER IS MOST EFFICIENT (UNLESS OTHERWISE SPECIFIED)**

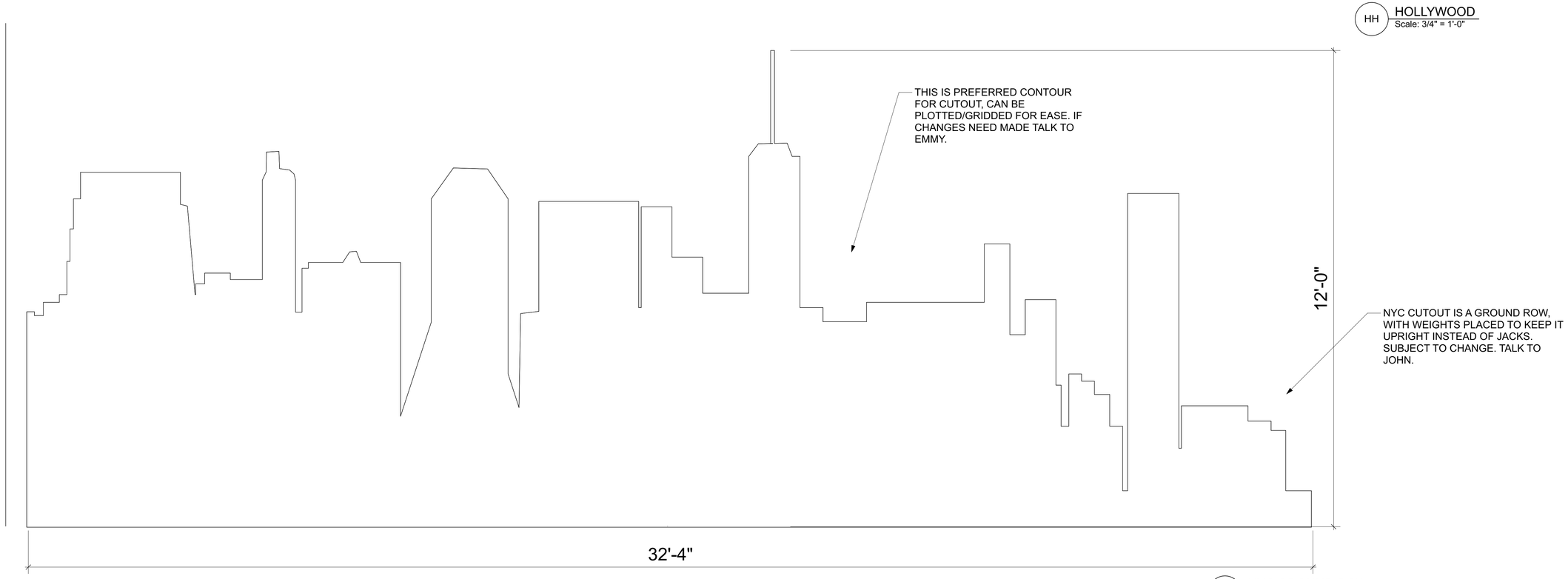

NYC NYC GROUND ROW
Scale: 3/4" = 1'-0"

BALL STATE UNIVERSITY	
TASTE OF BROADWAY	UNIVERSITY THEATRE
DIRECTOR: NINA KOSSLER AND BEVERLY BAUTISTA	19 OF 25
DESIGNER: EMMY WINTER	SCALE: 3/4" = 1'0"
LOCATION BACKGROUNDS	03/02/2023

VECTORWORKS EDUCATIONAL VERSION

VECTORWORKS EDUCATIONAL VERSION

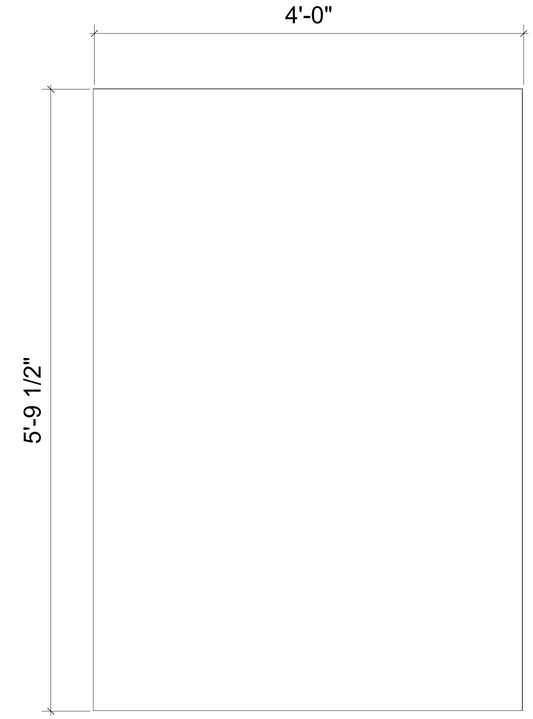

H HAPPYHOUR
Scale: 1 1/2" = 1'-0"

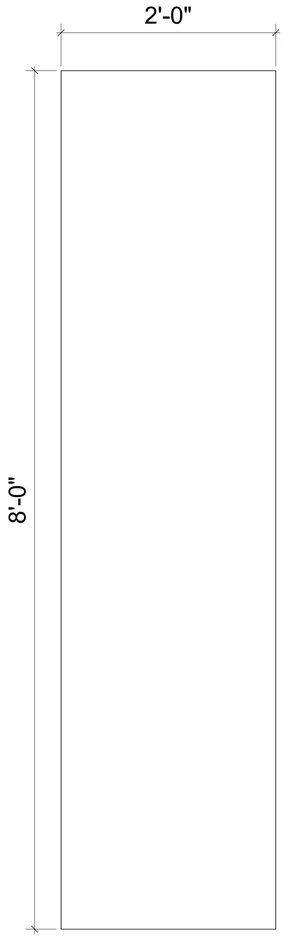

T TKTS
Scale: 1 1/2" = 1'-0"

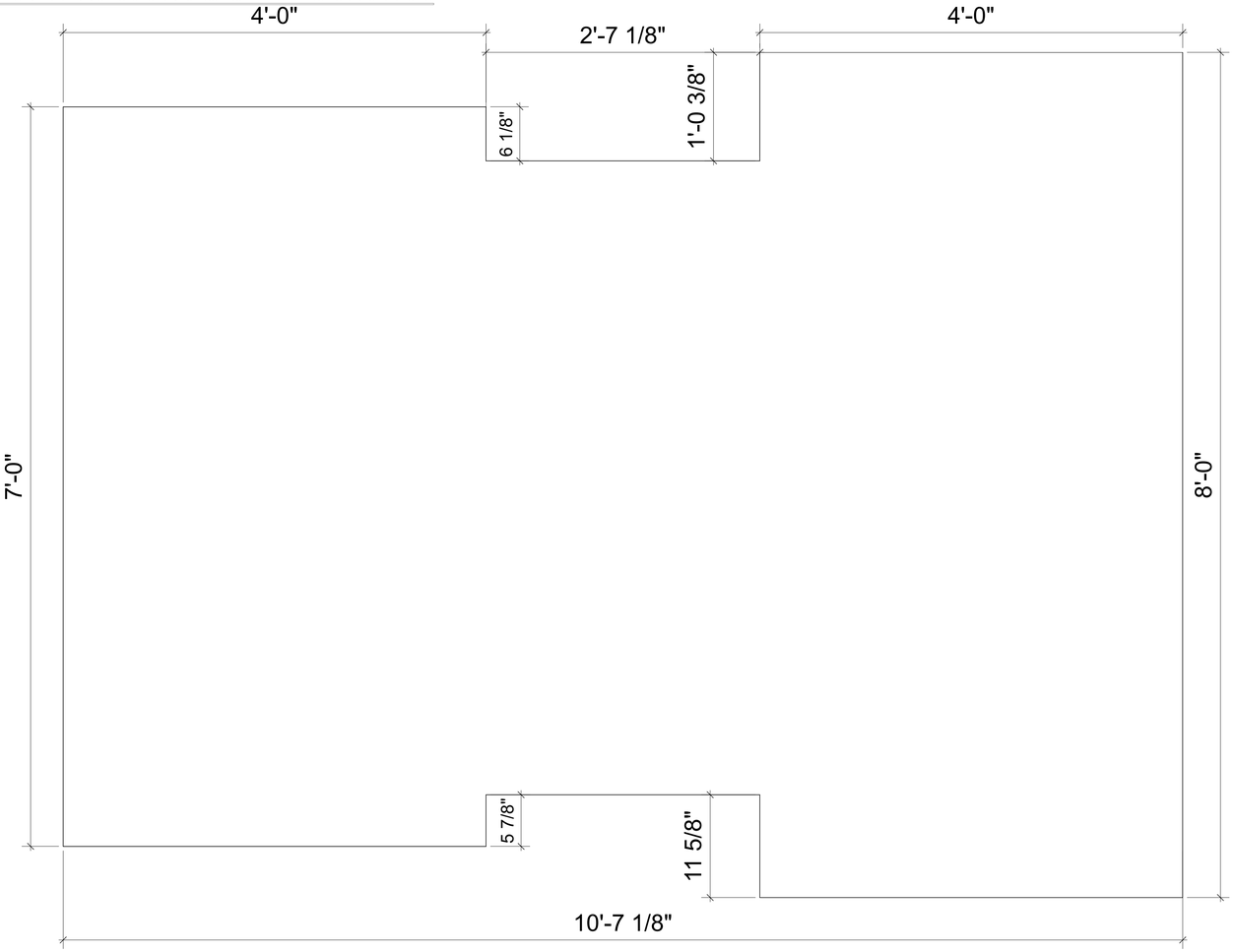

BB BROADWAYBILLBOARD
Scale: 1 1/2" = 1'-0"

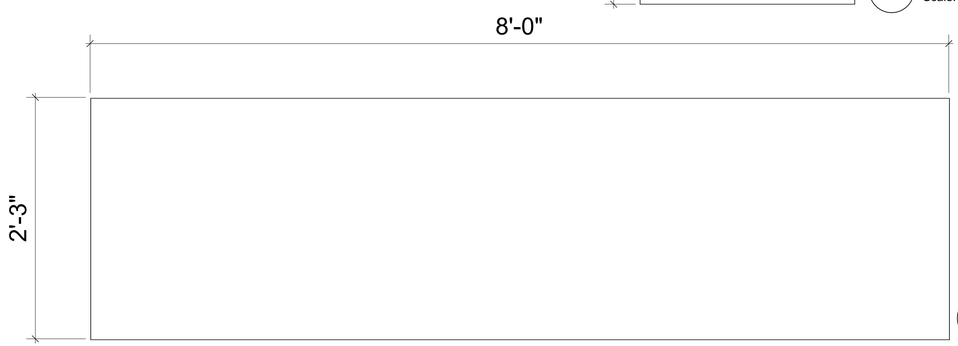

SQ TIMES SQUARE SIGN
Scale: 1 1/2" = 1'-0"

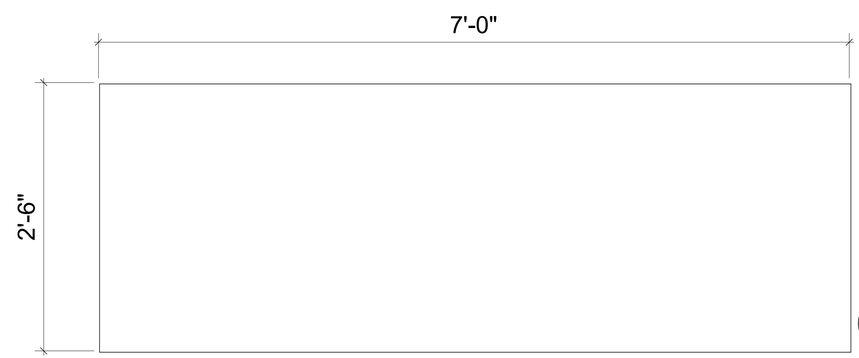

ST 42ND ST SIGN
Scale: 1 1/2" = 1'-0"

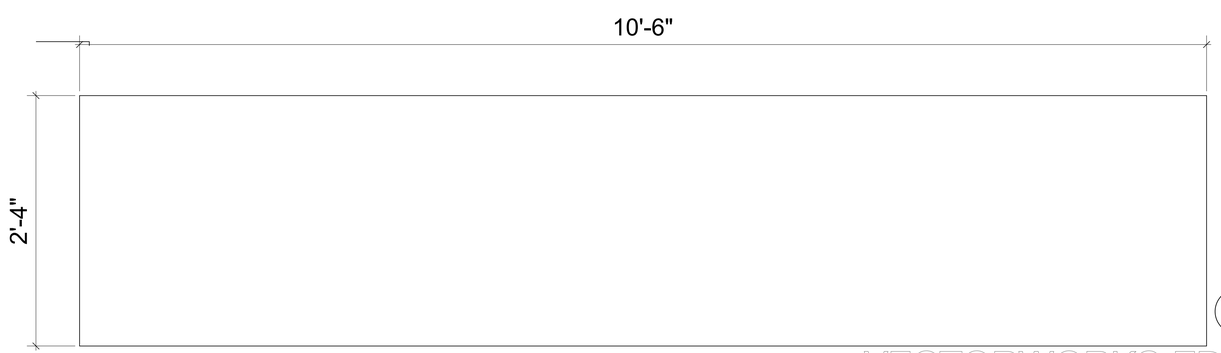

BW BROADWAY SIGN
Scale: 1 1/2" = 1'-0"

General Notes

1. **ALL SIGNS ARE PLYWOOD CUTOUTS, FRAMED HOWEVER IS MOST EFFICIENT (UNLESS OTHERWISE SPECIFIED)**

BALL STATE UNIVERSITY		
TASTE OF BROADWAY	UNIVERSITY THEATRE	
DIRECTOR: NINA KOSSLER AND BEVERLY BAUTISTA		20
DESIGNER: EMMY WINTER	SCALE: 1 1/2" = 1'0"	
RECTANGULAR SIGNS	03/02/2023	OF 25

VECTORWORKS EDUCATIONAL VERSION

VECTORWORKS EDUCATIONAL VERSION

OP ORDER/PICKUP SIGN- MAKE 2
Scale: 3" = 1'-0"

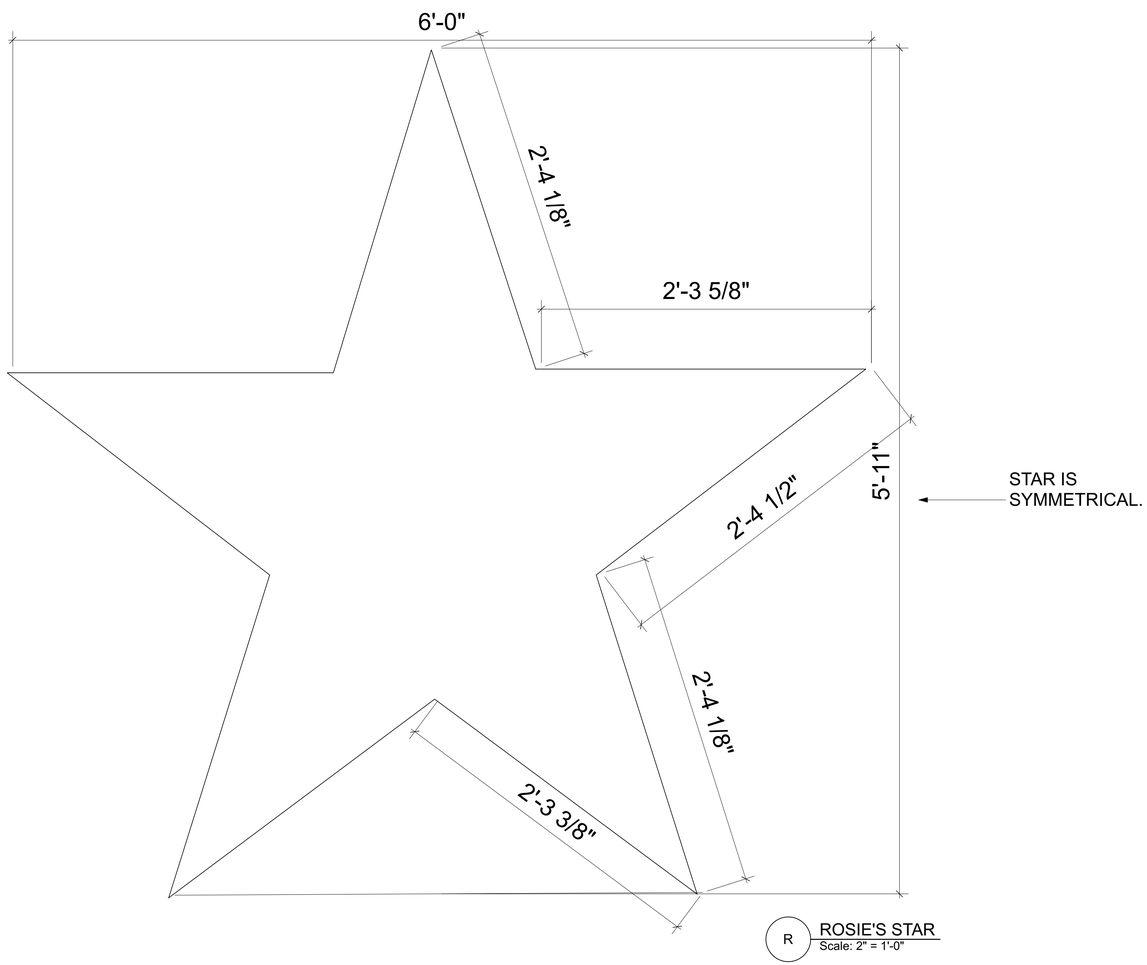

R ROSIE'S STAR
Scale: 2" = 1'-0"

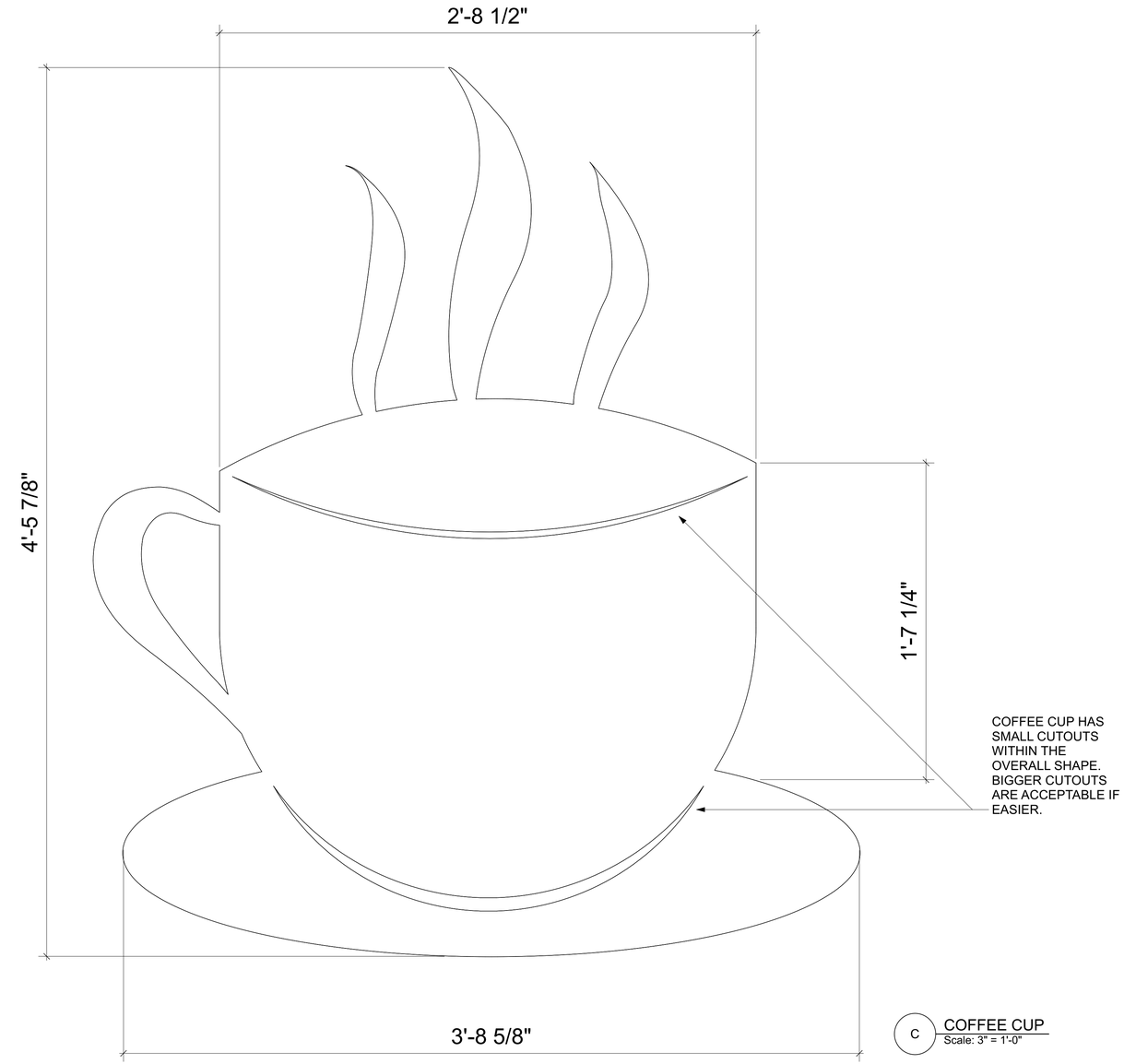

C COFFEE CUP
Scale: 3" = 1'-0"

General Notes

1. **ALL SIGNS ARE PLYWOOD CUTOUTS, FRAMED HOWEVER IS MOST EFFICIENT (UNLESS OTHERWISE SPECIFIED)**

BALL STATE UNIVERSITY		
TASTE OF BROADWAY	UNIVERSITY THEATRE	
DIRECTOR: NINA KOSSLER AND BEVERLY BAUTISTA		21
DESIGNER: EMMY WINTER	SCALE: VARIED	
CAFE SIGNS AND ROSIE'S STAR	03/02/2023	OF 25

VECTORWORKS EDUCATIONAL VERSION

VECTORWORKS EDUCATIONAL VERSION

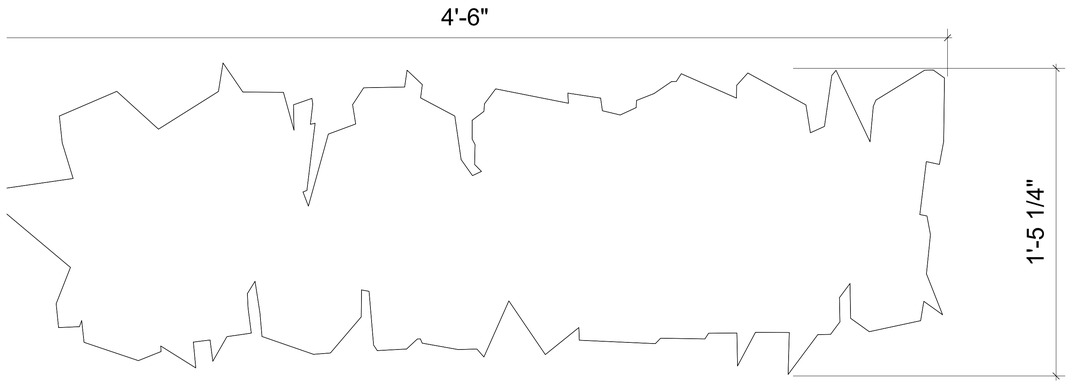

F PHANTOM (GRAFFITI)
Scale: 3" = 1'-0"

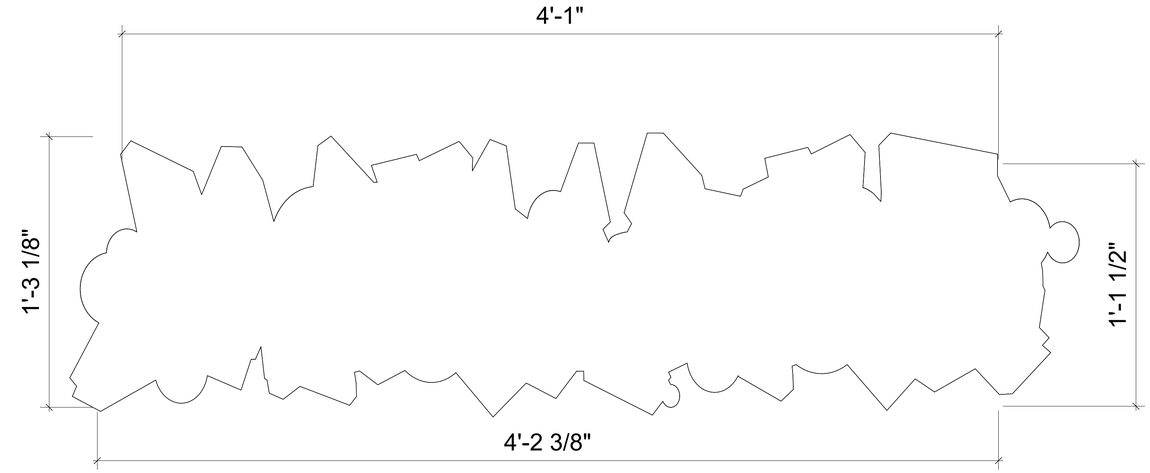

Q AVENUE Q (GRAFFITI)
Scale: 3" = 1'-0"

GRAFFITI CAN BE GRIDDED/PLOTTED, WHICHEVER IS EASIEST. PREFERRABLY AS EXACT AS POSSIBLE.

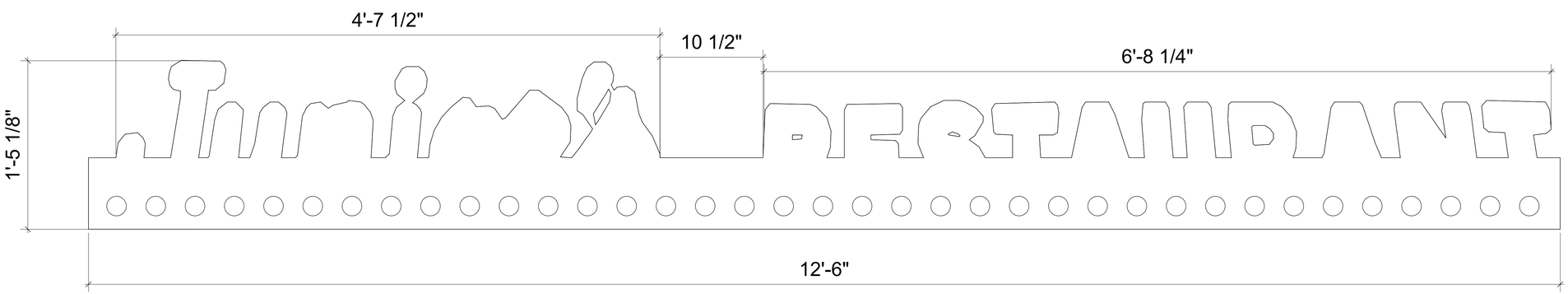

LIGHTS ARE PREFERRED, DEPENDENT ON RESOURCES-SUBJECT TO CHANGE

J JUNIORS
Scale: 2" = 1'-0"

General Notes

1. **ALL SIGNS ARE PLYWOOD CUTOUTS, FRAMED HOWEVER IS MOST EFFICIENT (UNLESS OTHERWISE SPECIFIED)**

BALL STATE UNIVERSITY		
TASTE OF BROADWAY	UNIVERSITY THEATRE	
DIRECTOR: NINA KOSSLER AND BEVERLY BAUTISTA		22
DESIGNER: EMMY WINTER	SCALE: VARIED	
GRAFFITI AND JUNIORS SIGN	03/02/2023	OF 25

VECTORWORKS EDUCATIONAL VERSION

VECTORWORKS EDUCATIONAL VERSION

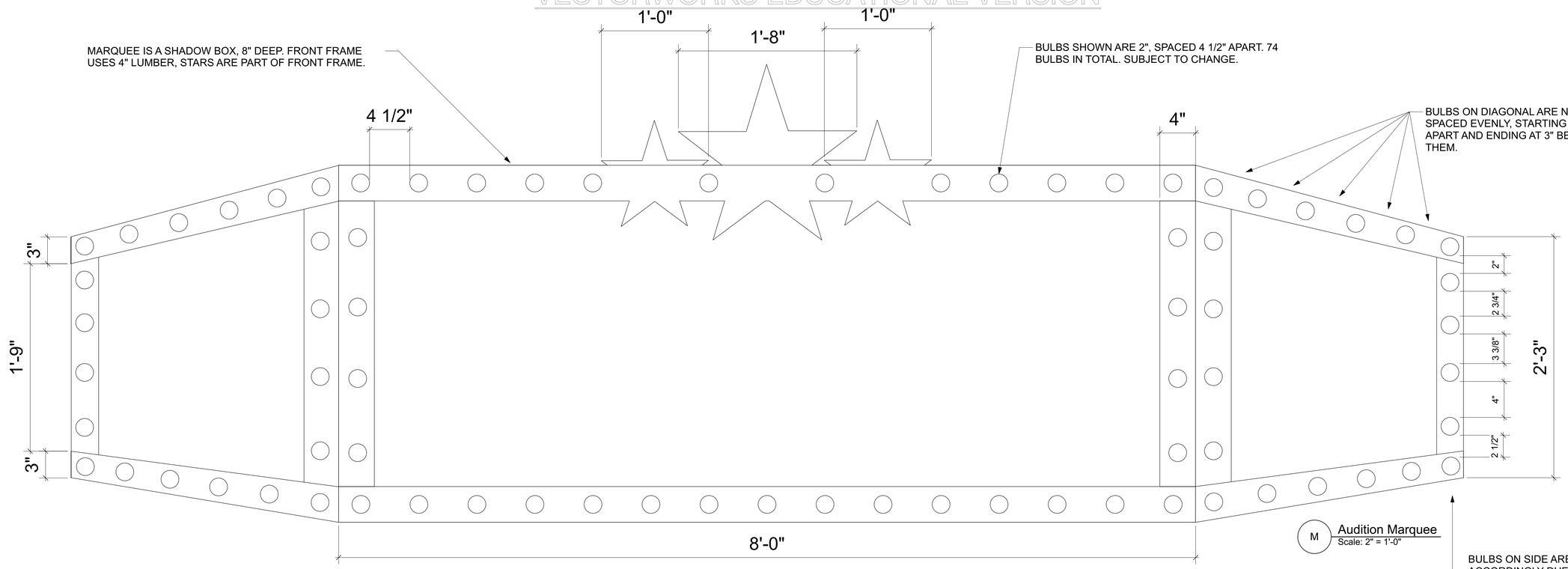

M Audition Marquee
Scale: 2" = 1'-0"

ARROWS ARE CUTOUTS WITH HOLES FOR BULBS (NEON PINK) TO BE PUSHED THROUGH. BULB SIZE IS SUGGESTED, SUBJECT TO CHANGE.

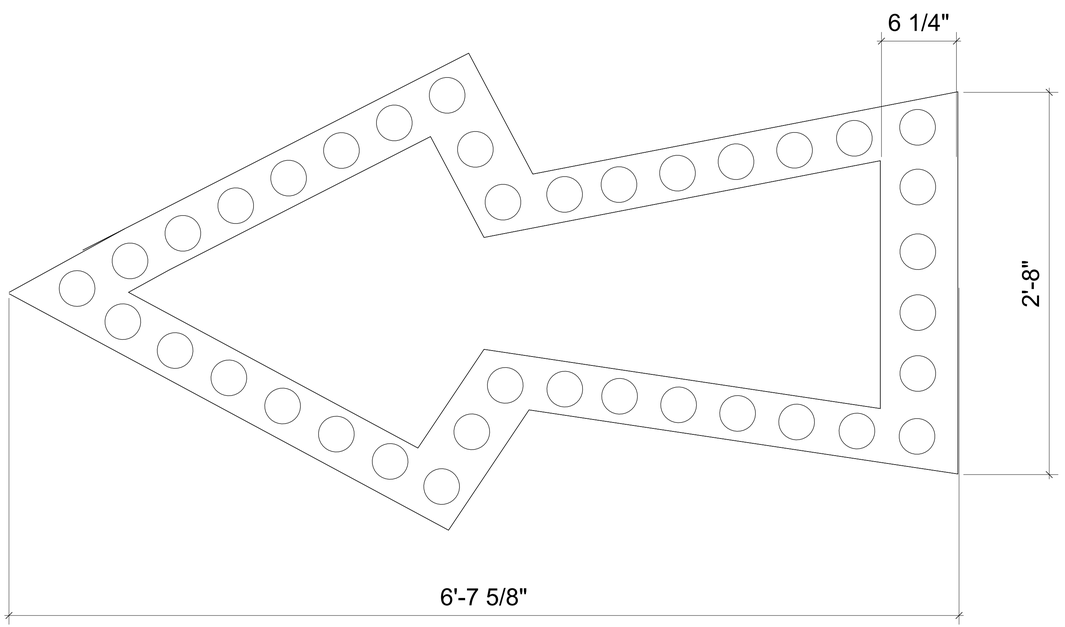

A ARROW- REVERSE AND REPEAT
Scale: 2" = 1'-0"

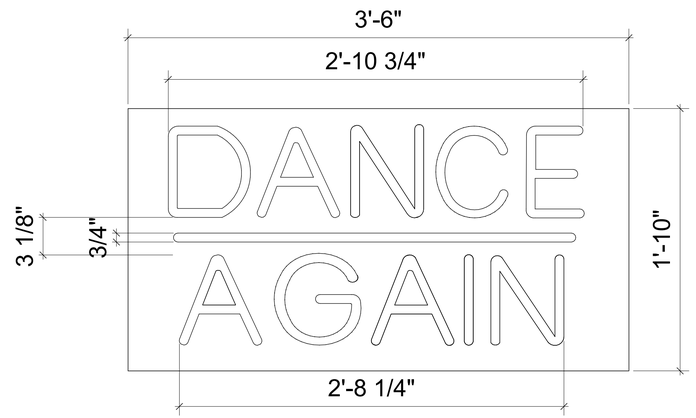

THIS IS A LIGHT BOX, DOES NOT HANG FROM A LINESET. NEEDS TO BE REMOVABLE FROM FRONT OF BAR.

D DANCE AGAIN
Scale: 2" = 1'-0"

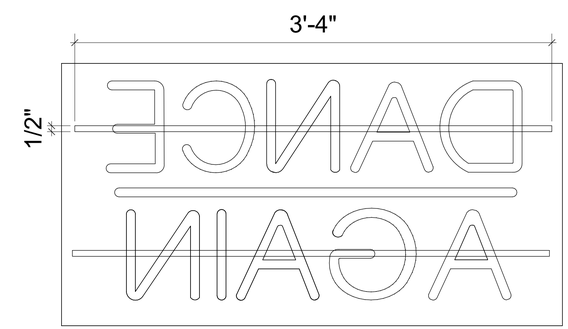

D2 DANCE AGAIN BACK
Scale: 2" = 1'-0"

BALL STATE UNIVERSITY		
TASTE OF BROADWAY	UNIVERSITY THEATRE	
DIRECTOR: NINA KOSSLER AND BEVERLY BAUTISTA		23
DESIGNER: EMMY WINTER	SCALE: 2" = 1'0"	
LIGHTED SIGNS	03/02/2023	OF 25

VECTORWORKS EDUCATIONAL VERSION

VECTORWORKS EDUCATIONAL VERSION

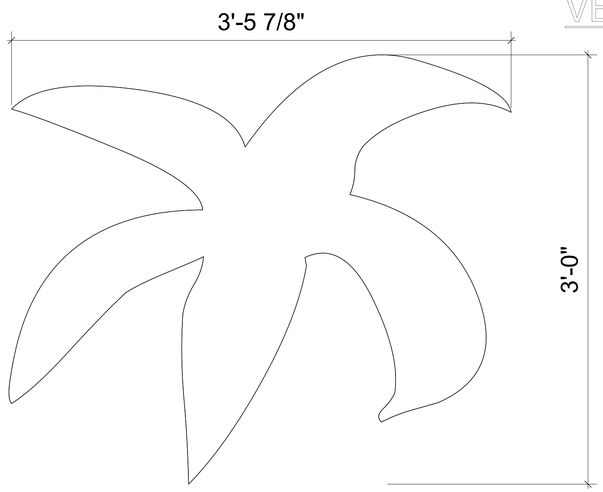

P3 UPSTAGE PALM TREE- MAKE 2
Scale: 2" = 1'-0"

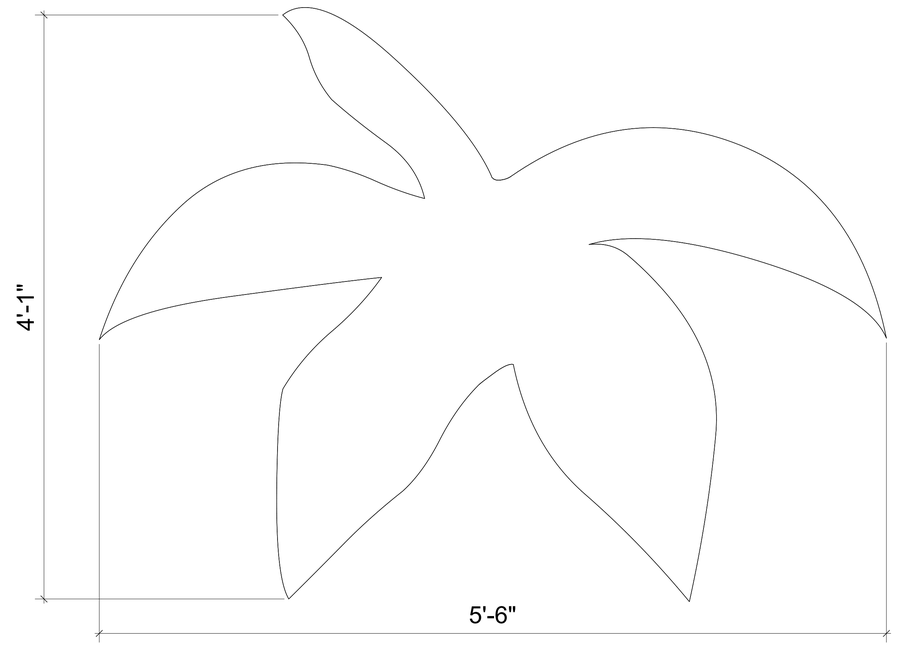

P2 MIDDLE PALM TREE- MAKE 2
Scale: 2" = 1'-0"

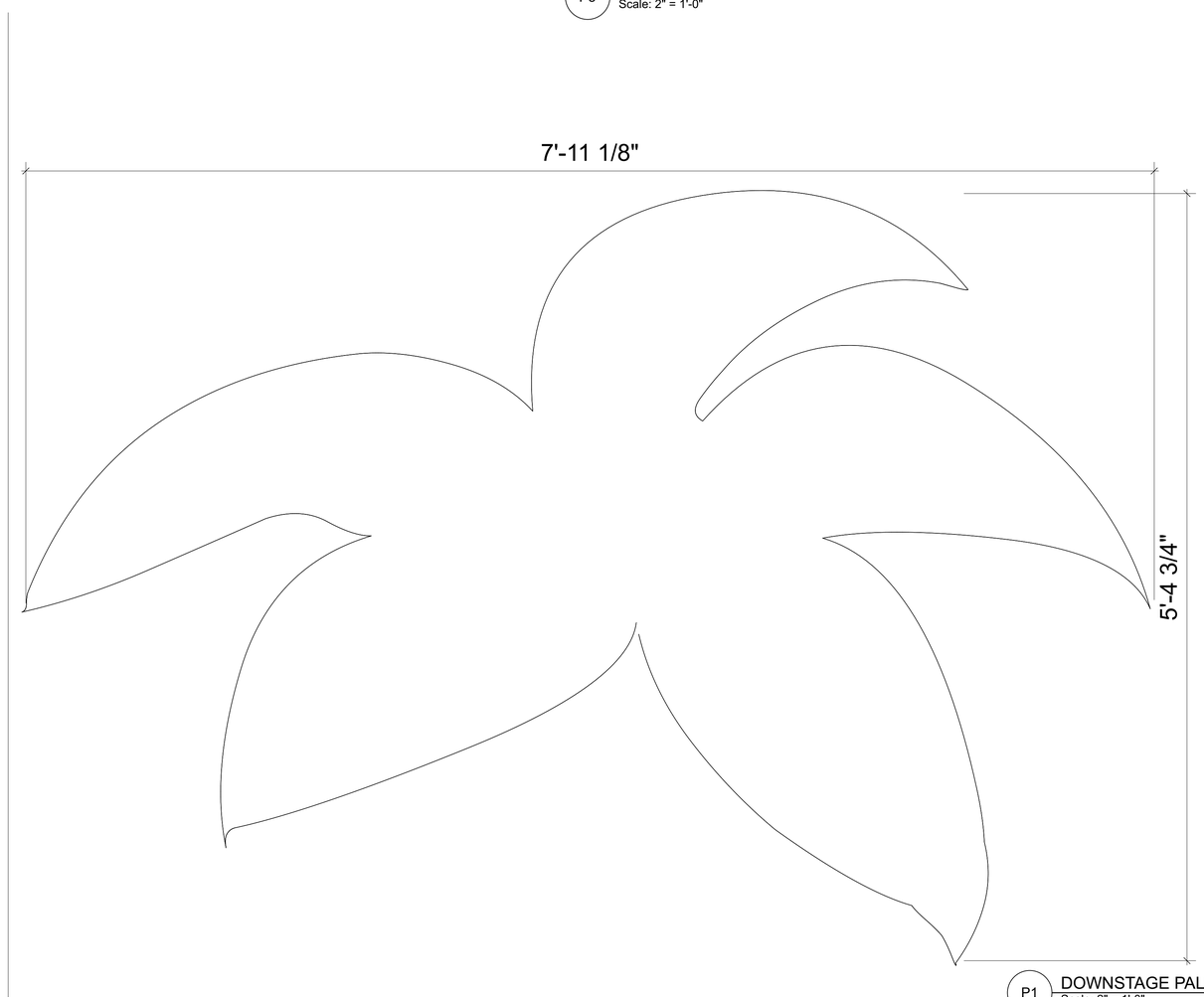

P1 DOWNSTAGE PALM TREES- MAKE 2
Scale: 2" = 1'-0"

General Notes

1. **ALL SIGNS ARE PLYWOOD CUTOUTS, FRAMED HOWEVER IS MOST EFFICIENT (UNLESS OTHERWISE SPECIFIED)**
2. **PALM TREE SHAPES DO NOT HAVE TO BE EXACT, AS LONG AS THEY ADHERE TO SPECIFIED SIZE.**

BALL STATE UNIVERSITY		
TASTE OF BROADWAY	UNIVERSITY THEATRE	
DIRECTOR: NINA KOSSLER AND BEVERLY BAUTISTA		24
DESIGNER: EMMY WINTER	SCALE: 2" = 1'0"	
PALM TREES	03/02/2023	OF 24

VECTORWORKS EDUCATIONAL VERSION

VECTORWORKS EDUCATIONAL VERSION

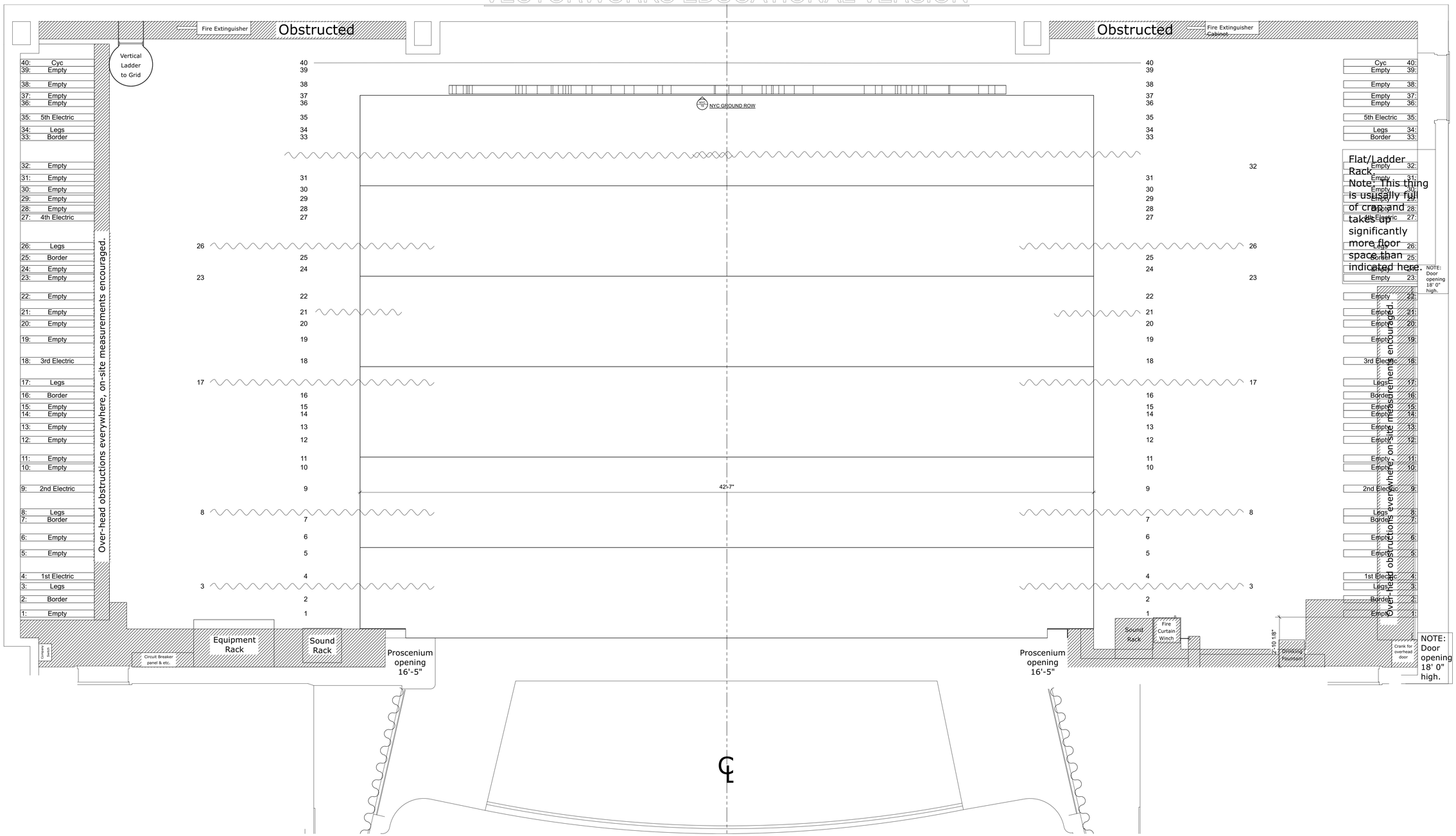

BALL STATE UNIVERSITY		
TASTE OF BROADWAY	UNIVERSITY THEATRE	
DIRECTOR: NINA KOSSLER AND BEVERLY BAUTISTA		25
DESIGNER: EMMY WINTER	SCALE: 3/8" = 1'0"	
GROUNDPLAN: EMPTY STAGE	03/02/2023	OF 25

VECTORWORKS EDUCATIONAL VERSION